# ERIE RAILROAD COMPANY

## EASTERN DISTRICT

## New York Division

## New Jersey & New York Railroad

(Peter Duryee, Trustee)

## Northern Railroad of New Jersey

## New York & Greenwood Lake Railway and Branches

---

Time Table No. 36

Effective 12.01 A.M.

## SUNDAY, SEPT. 26, 1948

FOR EMPLOYES ONLY

---

EASTERN STANDARD TIME

---

# 36

# THINK! THEN ACT SAFELY

---

G. C. WHITE,
Superintendent

M. G. McINNES,
Assistant General Manager

R. C. RANDALL,
General Manager

# INDEX


*Pages*
1- 9. Special Instructions.
10-13. Speed Restrictions.
14-16. General Instructions.
16-22. Special Instructions.
22-23. Telephones.
24-25. Automatic Train Control Instructions.
26-37. New York Division Eastward Trains.
38-51. New York Division Westward Trains.
52-55. Bergen County Railroad Trains.
56-57. Newark Branch Trains.
58. Newburgh Branch and Graham Line.
59. Middletown and Crawford, Pine Island and Montgomery Branches.
60-65. N. Y. and Greenwood Lake Railway Eastward Trains.
66-71. N. Y. and Greenwood Lake Railway Westward Trains.
72-73. Orange Branch Trains.
74-75. Caldwell Branch Trains.
76-77. N. J. and N. Y. Railroad Eastward Trains.
78-79. N. J. and N. Y. Railroad Westward Trains.
80-81. Piermont Branch Trains.
82-87. Northern Railroad of New Jersey Eastward Trains.
88-94. Northern Railroad of New Jersey Westward Trains.
95-96. Station Number List.
Front Cover Surgeons and Speed Table.
Back Cover Station Number List.


## COMPANY SURGEONS

SO FAR AS NEW YORK STATE IS CONCERNED THIS NOTICE APPLIES TO EMPLOYES IN INTERSTATE COMMERCE ONLY.

W. E. MISHLER, CHIEF SURGEON, CLEVELAND, OHIO

| NAME | ADDRESS | TELEPHONE |
|---|---|---|
| Hugh L. Murphy | 1 Hanson Place, Brooklyn | Nevins 8-7494 |
| | 1356 St. Marks Ave., Brooklyn | President 4-0286 |
| Rudolf Aebli, Oculist | 30 East 40th St., New York | Caledonia 5-9400 |
| J. F. Moriarty | First Aid Room, Jersey City | Journal Sq. 2-6400 |
| F. P. Nicholson, Oculist | 895 Summit Ave., Jersey City | Journal Sq. 2-3171 |
| John C. Talty | 935 Washington St., Hoboken | Hoboken 3-3028 |
| J. F. Moriarty | 723 Washington St., Hoboken | Hoboken 3-8795 |
| J. L. Evans | 893 Park Ave., Woodcliff on Hudson | Union 3-1900 |
| Thomas M. Pascall | 197 Lincoln Ave., Newark | Humboldt 2-0757 |
| Leo V. Becker | 69 Ward St., Paterson | Sherwood 2-4017 |
| Thomas Sanfacon, Oculist | 340 Park Ave., Paterson | Sherwood 2-4616 |
| A. Van Eerde | 339 Lafayette Ave., Hawthorne | Hawthorne 7-2161 |
| D. R. Crounse | 84 Broadway, Passaic | Passaic 2-0189 |
| Wayne W. Hall | 240 Prospect St., Ridgewood | Ridgewood 6-2699 |
| James S. Brescia | 29 Franklin Ave., Waldwick | Allendale 1-3161 |
| R. F. Sengstacken | 3 Mansfield Ave., Suffern | Suffern 594 |
| John C. Petrone | 35 Park Ave., Suffern | Suffern 84 |
| H. F. Morrison | Meyers Rd., Tuxedo Pk., Tuxedo | Tuxedo 148 |
| R. L. Lippincott | 5 Wisner Terrace, Goshen | Goshen 45 |
| Roswell L. Schmitt | Horton Hospital, Middletown | Middletown 6502 |
| A. E. Chace | 11 Linden Place, Middletown | Middletown 5015 |
| Daniel O'Leary | 158 Grand St., Newburgh | Newburgh 894 |
| Daniel Rakov | Maybrook, N. Y. | Maybrook 5321 |
| Edward J. Walter, Oculist | 157 West Main St., Port Jervis | Port Jervis 4-4684 |
| G. E. Kenny | 112 Pike St., Port Jervis | Port Jervis 3-0774 Res. 4-6214 |
| Clare C. Kenny | Bell Apts., 2nd St. and Penna. Ave., Matamoras | Port Jervis 6-2622 Res. 6-1151 |
| A. A. Mutter | 75 Beech St., Arlington | Kearny 2-0154 |
| Edwin A. Seifert | 415 Ridgewood Ave., Glen Ridge | Glen Ridge 7-4468 |
| T. Nicola | 96 Gates Ave., Montclair | Montclair 2-2050 |
| W. V. Meir | Haskell | P'ton Lakes 7-0040 |
| H. W. Taylor | 247 Mountain Rd., Englewood | Englewood 3-1481 |
| A. W. Pindar | 627 Queen Anne Road, Teaneck | Teaneck 6-9589 |
| Stephen R. Montieth | 50 North Broadway, Nyack | Nyack 360 |
| E. H. Kline | 63 North Broadway, Nyack | Nyack 212 |
| J. C. Dingman | 164 Central Ave., Spring Valley | Spring Valley 19 |

### Table Showing Rate of Speed Required per Mile to Equal a Given Number of Miles per Hour

| Time per Mile | Miles per Hour | Time per Mile | Miles per Hour |
|---|---|---|---|
| 0 min. 51 sec. | 70.59 | 2 min. 11 sec. | 27.48 |
| 0 min. 55 sec. | 65.45 | 2 min. 24 sec. | 25.00 |
| 1 min. 0 sec. | 60.00 | 2 min. 40 sec. | 22.50 |
| 1 min. 5 sec. | 55.38 | 3 min. 0 sec. | 20.00 |
| 1 min. 12 sec. | 50.00 | 3 min. 25 sec. | 17.56 |
| 1 min. 20 sec. | 45.00 | 4 min. 0 sec. | 15.00 |
| 1 min. 30 sec. | 40.00 | 4 min. 48 sec. | 12.50 |
| 2 min. 0 sec. | 30.00 | 6 min. 0 sec. | 10.00 |



# SPECIAL INSTRUCTIONS

## RULES OF THE OPERATING DEPARTMENT

Effective July 1, 1930

When it becomes apparent that a trip cannot be completed within sixteen hours, it is the duty of Conductor and Engineer to notify Superintendent promptly, giving at least two hours advance notice.

## STANDARD CLOCKS

Train Dispatcher's and Engine Dispatcher's office, Jersey City.
Engine Dispatcher's office, Secaucus.

XW Tower
Waldwick
Suffern Tower
Goshen
Middletown
Port Jervis { Ticket office / Caller's office / PX Yard office }
Montgomery
North Newark — Wanaque-Midvale — Caldwell
Spring Valley — Nyack

## TIME TABLES

The term Holiday as used in this time table applies to the following dates only: Memorial Day, May 30; Independence Day, July 4; Labor Day, Sept. 5; Columbus Day, Oct. 12; Election Day, Nov. 2; Thanksgiving Day, Nov. 25; Christmas Day, Dec. 25; New Year's Day, Jan. 1; Lincoln's Birthday, Feb. 12; Washington's Birthday, Feb. 22.

Trains operating over another railroad will be subject to rules and regulations of that railroad.

## SIGNS. Additional to Rule 6.

D. Day train order office.
N. Day and night train order office.
* Conditional stops.
F. Stop to let off or take on passengers.
X. Will not carry passengers.
H. Holiday stop.
Sat. Saturday.
Sun. Sunday.
Hol. Holiday.
N.B. Will not carry Baggage, Mail or Express.

Trains shown as flag stops to receive passengers at points where no employes are on duty will make regular stop between sunset and sunrise.

## WHISTLE SIGNALS

Track and other repair gangs have been supplied with temporary whistle signs for the purpose of placing along tracks in advance of location where men are working. These signs are discs mounted on metal standards; disc painted with white background and the letter "W" painted in black. Engineers will acknowledge by sounding whistle: one short—one long—one short, to be repeated until reaching the point where men are working.

The following whistle signal code will be used to call in flagman on the four-track territory between Jersey City and Croxton.

**Eastward**

Track 2 — — — —
" 4 — — — — O
" 3 (—O) — — — — O O
" 1 (—O) — — — — O O O

**Westward**

Track 1 — — — — —
" 3 — — — — — O
" 4 (—O) — — — — — O O
" 2 (—O) — — — — — O O O

The following whistle signal code will be used to call in flagman on the four-track territory between Suffern and Ridgewood Junction, Rutherford Junction and Hackensack Bridge, Granton Junction and Lundys Lane. On tracks Nos. 1 and 2, same as standard code. On track 4 calling in flagman from the west, four long and one short blasts of the whistle, thus — — — — O; on track 3 calling in flagman from the east, five long blasts of the whistle followed by one short blast, thus, — — — — — O.

The signal for calling in flagman in passing tracks and the freight track from east end of Port Jervis yard east will be the same signal as is used for tracks Nos. 3 and 4 in four-track territory.

Eastbound freight trains for Main Line, or trains having cars to leave at Ridgewood Junction, will sound four (4) short blasts of whistle passing Waldwick.

## MARKERS

### Three- and Four-Track Territory

Track numbers reading from north to south.

| | |
|---|---|
| Suffern—Ridgewood Jct. | 1—3—4—2 |
| Rutherford Jct.—Hackensack Bdge. | 3—4—1—2 |
| Granton Jct.—Lundys Lane | 3—1—2—4 |
| Bergen Archways | 1—3—4—2 |

Trains will display markers in accordance with Operating Rules 19 and D19. Figure 9 will apply to trains running on tracks 3 and 4, yellow or green next to tracks 1 and 2.

Trains between Croxton Tower and Jersey City Terminal Tower will display markers red to rear on all tracks—Rule D19 modified accordingly.

Trains operating on third track between Port Jervis and Graham will display markers in accordance with Operating Rule 19, figure 9, yellow or green next to main track.

Rule D19 is amplified as follows: Yellow or green lights to the front and side and red lights to the rear must be displayed before a train fouls the main track on which the current of traffic is in the direction the train is moving.

## CLASSIFICATION SIGNALS

The display of two white flags and two white lights, as required under Operating Rule 21, will be omitted in single track territory where no trains are scheduled, and in double or multiple track territory.

## INSTRUCTIONS GOVERNING TRAINS MOVING AGAINST THE CURRENT OF TRAFFIC

When necessary to allow a train to follow another train against the current of traffic, when such movements are made by train order, signalman must bring train to full stop before clearing any signal.

## RULE 93A

Movements may be made against the current of traffic through the following yard limits by train orders, and further protection under Rule 93A need not be afforded: Middletown, Goshen.

## TRAIN REGISTERS

Engine Dispatcher's Office and Train Dispatcher's Office Jersey City. Engine Dispatcher's Office, Secaucus.

| | | |
|---|---|---|
| Croxton Yard A | Greycourt | Nanuet |
| Waldwick | Goshen | Nyack |
| Suffern | Pine Island Jct. (Erie trains) | Sparkill |
| Middletown | O. & W. Crossing | Tenafly |
| Port Jervis | Montgomery | Wanaque-Midvale |
| Newark | Pine Bush | Great Notch |
| Paterson, for Newark Branch trains only | Spring Valley | Caldwell |
| | Nanuet Jct., for Piermont Branch trains only | Essex Fells |
| | | West Orange |
| West Newburgh | | Forest Hill |

Trains not scheduled to stop at station at which train registers are located may register by throwing off train register slip, except when displaying signals for following section when train must stop and conductor register train in person.

When registering trains, write out in full the color of signals displayed; when not displaying signals write out in full "No Signals," sign name and initials, and use no ditto marks.

## SUPERIORITY OF TRAINS

Eastward trains are superior to westward trains of the same class unless otherwise specified.

## CLEARING OF TRAINS

Trains will not leave initial station on single track without a clearance form A or B when operator is on duty.

Eastbound first class trains will not leave Port Jervis without a clearance form A.

Eastbound extra trains will not leave Port Jervis without permission from operator, Port Jervis station.

Extra trains except passenger extras will start from their initial point and proceed on two or more tracks without running orders.



## MOVEMENT OF TRAINS

Trains making maximum time, or receiving special orders to run at a higher rate of speed, will run expecting to overtake trains making minimum or schedule time.

Trains entering passing siding in single track territory to permit opposing trains to pass, will move with caution over first crossing protected by automatic flagman or bell, after leaving siding, if such crossing lies within 2000 feet of the end of siding.

Employes' motor cars operating through interlocking plants will not proceed over switches without proper signal indication, and when passing tower will notify towerman.

On two or more tracks, employes' motor cars will not pass an interlocking tower while train is passing, unless they receive hand signal from towerman.

Track 3 between Hackensack River Bridge and N. J. & N. Y. Junction is reversible; trains in either direction will proceed from these points on receipt of proper signal indication and be governed by intermediate automatic signals, Rule D261 of operating rules.

Main tracks between Hackensack River Bridge and Croxton Tower, Main Line, are reversible; trains in either direction will proceed from these points on receipt of proper signal indication, and be governed by intermediate automatic signals. Rule D261 of operating rules.

The four tracks between Croxton Tower and Jersey City Terminal Tower are reversible; trains in either direction will proceed from these points on receipt of proper signal indication, and be governed by intermediate automatic signals. Rule D261 of operating rules.

Tracks between Croxton Tower and OS Tower through Bergen Tunnel are reversible; trains in either direction will proceed from these points on receipt of proper signal indication and be governed by signal located at west end of tunnel.

## RULES FOR THE OPERATION AND SUPERVISION OF AIR BRAKE, AND TRAIN AIR SIGNAL EQUIPMENT

Effective 1943

Running test provided for in Rule 33 will be made by Westward Trains entering Bergen Archways. All Westward Trains that do not make station stop at Middletown will make running test before descending grade at Otisville. Eastward Trains will make running test before descending grade at Otisville.

## RATING FOR ORDINARY TRAINS

Train tonnage will be determined by Chief Train Dispatcher. Trains will be given maximum rating unless otherwise directed.

## GRADE CROSSINGS

Except where interlocking signals are in operation, trains and engines must come to full stop not less than 200 nor more than 800 feet from railroad crossings at grade.

Automatic grade crossing interlocked signals, N. Y. & G. L. Ry. and N. Y. S. & W. R. R. at Pompton Jct.

Two-unit color light grade crossing signals located 200 feet from crossing to govern movement in each direction on both railroads. Signals consist of a top unit indicating stop or proceed, and a lower unit of a fixed red light as location signal.

A time release to work in conjunction with grade crossing signals is located in box at crossing, with instructions for operation.

A train finding signal in stop position, member of crew will proceed to crossing and after ascertaining no train approaching on other railroad, will work release and train proceed on signal indication.

In event signal fails to clear after release has been operated, train will move over crossing under flag protection.

Automatic block signal rules dated July 1, 1930, will govern.

Telephone located at crossing connects with Pompton Plains, Wanaque-Midvale stations and W R Tower.

## CROSSOVER MOVEMENTS

In case of emergency, when it becomes necessary for a passenger train to make an irregular move at

| | | |
|---|---|---|
| Graham | Newburgh Jct. | Great Notch |
| Goshen | Suffern | Forest Hill |

Will reduce speed to ten (10) miles per hour through crossover.

When necessary to enter upon main tracks or cross over from one main track to another, permission will first be obtained except in following yards: Port Jervis, Newburgh, Paterson, Newark. This does not apply to N. R. R. of N. J. west of Granton Jct. This does not relieve enginemen and trainmen from protecting the movements as per Rule 99. Permission to use main tracks or crossovers operated by interlocking plants will be given by signal indications.

## REMOTE CONTROL SWITCHES ELECTRICALLY OPERATED

Train movements over these switches are governed by interlocking signals. Should switch fail to operate, enginemen, conductor or trainman will communicate with person controlling the switch and after receiving instructions from him to operate switch manually will proceed according to instructions posted near the switch.

*Location:*

O & W Bridge West of "MQ" Crossing—Main track crossover
—Switch leading from westward tracks to Maybrook Loop track—controlled from "MQ" Crossing Tower.

N. J. & N. Y. Junction—Junction switch between N. J. & N. Y. R. R. and Track 3—controlled from HX Tower.

Forest Hill—Main track crossover
—Orange Branch connection to eastward main track
—Crossover from Orange Branch to South Canal siding.

## SPRING SWITCHES

Spring switches are located at points indicated below. Train crews performing switching operation over these switches are required to operate switch by hand, same as ordinary switch stands.

Caution must be taken to prevent back up movement, slack running out or taking slack over spring switches before forward movement is completed. If necessary to make such movements, switch must be operated by hand.

| | |
|---|---|
| Coalberg Jct. | —Westbound Main track to N. Y. S. & W. Connection. |
| Moodna Viaduct | —West end Viaduct, end double track. |
| Tenafly | —West end double track west of station. |
| Closter | —East end double track. |
| Closter | —West end double track. |
| Sparkill | —East end double track, east of station. |
| Great Notch | —West end first crossover, west of station. Second crossover, west of station. |

## SPECIAL ORDER BOOKS AND BULLETIN BOARDS

Train Dispatcher's and Engine Dispatcher's Office, Jersey City
Freight Yard Office, Jersey City
Engine Dispatcher's Office, Secaucus

XW Tower
Waldwick
Suffern
Goshen
Middletown

Croxton:
Yard A
Yard J
North Hump
Yard D
KW Yard Office

Port Jervis:
Caller's Office
Station Master's Office
Newark
West Newburgh

Caldwell
Wanaque-Midvale
Spring Valley
Sparkill
Nyack

Conductors and Engineers when registering in Special Order Books are required to sign their name and initials and to enter in column headed "Time" the date and time they examined each special order. It is forbidden for employees, other than those authorized to make entries of any nature in Special Order Books.

## YARD LIMITS—INDICATED BY SIGNS

Newark
Paterson
Newburgh Branch
Greycourt
Vails Gate Jct. to W. Cornwall
Newburgh
Goshen
Middletown
Port Jervis

Montgomery
Montgomery Branch—
1500 feet west of MQ Crossing to 2400 feet east of O. & W. Crossing.
Pine Island Branch—
Pine Island to Pine Island Jct.

---

Nyack — Sparkill — Sparkill to Piermont Dock.
Freight tracks Nos. (3) and (4) Granton Jct. and Lundys Lane.

---

Nanuet — Spring Valley — Suffern (Piermont Branch)
Spring Valley to Thiells

---

Sparkill (Piermont Branch)

---

North Newark — West Orange to Forest Hill
Little Falls — Wanaque-Midvale
3000 feet from east end of Caldwell yard to 1500 feet west of west end of Essex Fells yard.



## RULES GOVERNING MANUAL AND CONTROLLED MANUAL BLOCK SYSTEMS, AUTOMATIC BLOCK SYSTEM AND INTERLOCKING

Effective July 1, 1930

Trains on New York Division Port Jervis to Jersey City, including Graham Line and B. C. R. R. will be governed by Automatic Block Signal, and Telephone Train Order Signal Rules, D251, 509B, 509C and 509D.

Trains on New York & Greenwood Lake Railway, Forest Hill east, New Jersey & New York Railroad, N. J. & N. Y. Jct. to Spring Valley and Northern Railroad of New Jersey will be governed by Automatic Block Signal Rules.

Trains on Newark Branch, Newburgh Branch, New York & Greenwood Lake Railway, Forest Hill west, Piermont Branch, Sparkill and Nanuet, Spring Valley and Suffern, will be operated under Manual Block Rules. (Rule 317B will govern.)

Indications of Manual Block Signals do not supersede Rule 93.

Day or Night Train Order and Block Offices are specified as opening and closing at certain times, but it is frequently necessary to have them open at hours before and after the time specified for operation, and trains will be governed by the signals at such points, regardless of the time specified for operation. Trains entering a Block under permissive indication displayed at a day and night Block Signal office will operate as per Rule 289 to the next day and night Block Signal office, regardless of a proceed signal that may be displayed at intermediate day or night Block Signal office, except when enginemen have positive information that the day or night Block Signal office is actually in operation. If a stop signal is displayed, trains will stop and ascertain cause.

Third track Port Jervis and Graham is not governed by Block Signals.

Tracks 3 and 4 between Granton Jct. and Lundys Lane are not governed by Block Signals.

## FIXED SIGNALS

POINTS WHERE INTERLOCKING HOME SIGNALS ARE USED AS TRAIN ORDER SIGNALS: See Rule 221-a, Rules of Operating Department effective July 1, 1930.

Hackensack Bridge
Rutherford Jct.
XW Tower
Ridgewood Jct.
Waldwick

Suffern
Newburgh Jct.
Goshen
Graham
BS Tower

MQ Tower
N. Y. & G. L. Jct.
Granton Jct.

POINTS WHERE BLOCK SIGNALS ARE USED AS TRAIN ORDER SIGNALS: See Rule 221-a, Rules of Operating Department effective July 1, 1930.

Newark
Cleveland St.
Belleville
Franklin Ave.
Athenia
XW Tower { Newark Branch
West Arlington
Orchard Street

Bloomfield
West Orange
Verona
Caldwell
Essex Fells
Montclair
Upper Montclair
Montclair Heights
Great Notch

Little Falls
Wayne
Pompton Plains
Wanaque-Midvale
Suffern { Piermont Branch
Spring Valley
Nanuet
Sparkill

## TELEPHONE TRAIN ORDER SIGNALS

Eastbound Automatic Signal, 87—2, Port Jervis
Westbound Automatic Signal, 87—1, Port Jervis
Westbound Automatic Signal, 85—1, east of Mile Post 86
Westbound Automatic Signal, 64—1—E, MQ Water Tank
Westbound Automatic Signal, 53—1—E, 1¼ miles east of BS Tower
Eastbound Automatic Signal, 34—2, west end of eastbound siding Sterlington, controlled by Suffern
Eastbound Automatic Signal, 14—2—B, Coalberg Jct.
Westbound Automatic Signal, 14—1—B, Coalberg Jct.
Westbound Automatic Signal, 4—1—1N, Susquehanna Transfer

Position Light Telephone Train Order Signal. A position light unit attached to pole below upper unit.

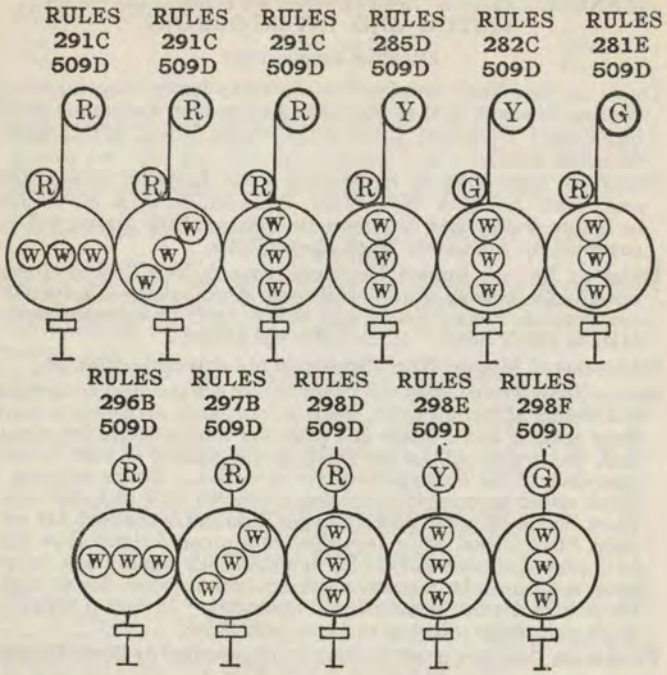


Where position light telephone train order signals are in service, Rules 509-b, 509-c and 509-d will be observed the same as where other types of signals are in use.

Rule 509-d, Rules of the Operating Department, paragraph (b) is amplified as follows: When telephone train order signals are set at 45 degrees above horizontal, or yellow light, indicating that train should take siding and siding cannot be used, or there is no siding, making it necessary to back train over to opposite track, signal may be passed without first bringing the train to a stop and may proceed at restricted speed until the rear end of train clears the crossover. After permission has been received from the Train Dispatcher or Signalman in charge, train may back over to the opposite tracks, protecting movement as prescribed by Rule 99.

## MISCELLANEOUS

Locomotives in regular pusher service or otherwise must not couple on trains while in motion.

Only members of crews manning work or wreck trains are permitted to give signals governing movement of such trains or portion of trains. Locomotive engineers of these trains must not accept signals given by other than members of train crew except stop signals given in emergency.

Locomotive cranes operating under their own power will remain standing when a train is passing on adjacent track.

Flagman must be stationed on rear car of passenger trains between Jersey City and Croxton, provided with red and white lantern, and placed on rear end of rear car both day and night. Red lantern to be lighted.

Rule 11, Rules of the Operating Department, will apply to freight trains passing fusees at restricted speed on third track between Port Jervis and Graham.

Signals 1–1–1, 1–1–2, 1–1–3 and 1–1–4 located between Grove St., and East End of Bergen Archways, Jersey City, are designated grade signals; passenger trains are authorized to pass these signals in stop position at restricted speed.

Light engines, work extras and crews performing switching service must not clear the main track for the purpose of meeting or passing trains at the following locations:

| | | |
|---|---|---|
| Rockland Light & Power Co. switch | Hillburn | MP 31.6 |
| Tuxedo Stores switch | Tuxedo | MP 36.85 |
| Arden Station switch | Arden | MP 43.30 |
| Monroe Station switch | Monroe | MP 48.15 |
| Wood switch | Middletown | MP 65.08 |



## OVERHEAD CLEARANCES

Employes are warned of close overhead clearances at following locations and must not go on top of box cars, engines or other high equipment while movements are being made under these bridges or structures. (State of New York.)

### New York Division

| *Mile Post* | *Location* | *Description of Bridge* |
|---|---|---|
| 30.48 | ¼ Mile East of Suffern | Overhead |
| 32.06 | ½ " West of Hillburn | River |
| 32.63 | ⅛ " East of Ramapo | Overhead |
| 34.83 | ¼ " West of Sloatsburg | " |
| 39.69 | 1¼ " East of Southfield | " |
| 50.10 | 1 " East of Oxford | " |
| 52.65 | ¾ " East of Greycourt | " |
| 53.45 | 100 Ft. West of Greycourt | " |
| 56.32 | 2 Miles West of Chester | " |
| 59.51 | ¾ Mile West of Goshen | " |
| 63.90 | 1¼ " West of New Hampton | " |
| 64.75 | 1¼ " East of Middletown | " |
| 67.12 | 1 " West of Middletown | " |
| 68.84 | Howells Junction | " |
| 69.33 | ½ Mile East of Howells | " |
| 72.33 | 2¼ " East of Otisville | " |
| 72.88 | 1¾ " East of Otisville | " |
| 74.61 | 200 Ft. East of Otisville | " |
| 81.52 | 2 Miles West of Graham | " |

### Graham Line

| | | |
|---|---|---|
| 72.14 | 4 Miles East of Howells Junction | Overhead |
| 73.89 | 2½ Miles East of Howells Junction | " |
| 76.42 | Howells Junction | " |
| 78.30 | 2¼ Miles West of Howells Junction | " |
| 83.48 | ⅝ " West of Otisville Tunnel | " |
| 86.95 | ¼ " East of Graham (East Track) | Subway (Overhead) |

### Piermont Branch

| | | |
|---|---|---|
| 13.80 | 1¼ Miles West of Monsey | Overhead |
| 14.76 | ¼ Mile East of Tallmans | " |
| 14.91 | 200 Ft. East of Tallmans | " |

### Newburgh Branch

| | | |
|---|---|---|
| 17.66 | ½ Mile West of West Newburgh | Overhead |
| | West Cornwall Station | " |

### Pine Island Branch

| | | |
|---|---|---|
| 60.63 | 1 Mile West of Goshen | Overhead |

### Middletown & Crawford Branch

| | | |
|---|---|---|
| 1.90 | 1,000 Ft. West of Circleville | Overhead |

## INDUSTRIAL SIDE TRACKS

### New York Division

| *Location* | *Industry* | *Obstruction* |
|---|---|---|
| Harriman | Pyridium Corp. | Building Plate |
| Chester | J. A. Bolling | " " |
| New Hampton | Benj. Horton | " " |
| Middletown | C. B. Gregory | " " |
| " | S. E. Leroy | " " |
| " | Middletown Ice & Coal Co. | " " |
| Port Jervis | Depuy Coal Co. | " " |
| " " | Seymour Coal Co. | " " |
| " " | A. C. Knight & Son | " " |
| " " | L. D. Horn | " " |

### Piermont Branch

| | | |
|---|---|---|
| Piermont | R. Gair Co. | Pipe<br>Chute<br>Canopy<br>Chute |

PIERMONT BRANCH—*Cont.*

| *Location* | *Industry* | *Obstruction* |
|---|---|---|
| Nanuet | Park Ice & Coal Co. | Shed |
| Monsey | Hutton & Johnson | " |
| Suffern | Belmont Gurnee Co. | Hopper |
| " | Malloy & Chatfield | Shed |

NEWBURGH BRANCH

| | | |
|---|---|---|
| Washingtonville | Cooper Brothers | Building Plate |
| Vails Gate | G. W. Gerow | " " |
| West Newburgh | King Coal Co. | " " |
| " " | Little Falls Paper Co. | " " |
| " " | Chadwick Bleachery | Electric Wires |
| Newburgh | Newburgh Coal Co. | Building Plate |

PINE ISLAND BRANCH

| | | |
|---|---|---|
| Florida | Roe Brothers | Building Plate |
| Pine Island | J. K. Roe | " " |

MONTGOMERY BRANCH

| | | |
|---|---|---|
| Montgomery | Brescia Milk Co. | Electric Wires |
| " | Brescia Coal Co. | Building Plate |
| " | Coe Coal Co. | " " |

MIDDLETOWN & CRAWFORD BRANCH

| | | |
|---|---|---|
| Pine Bush | Van Keuren Lumber & Coal Co. | Building Plate |
| " " | H. E. Grover | " " |

N. J. & N. Y. RAILROAD

| | | |
|---|---|---|
| Spring Valley | Comfort Coal-Lumber Co. | Shed |

N. R. R. OF NEW JERSEY

| | | |
|---|---|---|
| Nyack | Gregory & Sherman | Shed |
| " | W. H. White Coal Co. | Electric Wires |
| " | W. H. White Coal Co. | Cable |

The clear space between the lowest signal line conductor and the surface of track rails at the following locations is less than 27 feet. Employes must not ride on top of freight cars at these locations.

NEW YORK DIVISION

| *Mile Post* | *Location* | *Description* |
|---|---|---|
| 13.85 | 200 ft. west of Lakeview | Station switch |
| 17.71 | 150 ft. west of Hawthorne | 2 main tracks |
| 34.60 | Sloatsburg | Station switch |
| 45.25 | Newburgh Junction | Storage track, wye track and Hill tracks |
| 74.70 | Otisville | Station switch (westbound) |

BERGEN COUNTY RAILROAD

| | | |
|---|---|---|
| 18.85 | 1000 ft. east of Ridgewood Jct. | 2 main tracks |
| 18.90 | 900 ft. east of Ridgewood Jct. | Freight house siding |

GRAHAM LINE

| | | |
|---|---|---|
| 80.35 | West of BD Crossover | 2 main tracks |
| 81.50 | East of Otisville Tunnel | 2 main and dump tracks |
| 86.76 | East of FX Tower | 2 main tracks |

NORTHERN RAILROAD OF NEW JERSEY

| | | |
|---|---|---|
| 3.10 | 150 ft. east of Lundys Lane | West main track and track 3 |
| 4.09 | Susquehanna Transfer | Crossover |
| 7.10 | 50 ft. east of Granton Jct. Tower | Eastbound main track |
| 8.90 | Ridgefield | 2 main tracks |
| 11.80 | 500 ft. east of Leonia | 2 main tracks |
| 23.96 | 900 ft. west of Sparkill | N. R. R. and Piermont Branch main track |
| 23.97 | 1100 ft. west of Sparkill | Main track |

NEWARK BRANCH

| | | |
|---|---|---|
| 4.50 | 600 ft. west of N. Y. & G. L. Jct. | 2 main tracks |



NEW YORK & GREENWOOD LAKE RAILWAY

| *Mile Post* | *Location* | *Description* |
|---|---|---|
| 7.92 | North Newark | Freight house siding |
| 8.48 | Forest Hill | Side track |
| 8.50 | Forest Hill | Orange Branch main track and side track |
| 16.60 | Great Notch | Main track, Caldwell Bch. |
| 28.00 | Pompton Jct. crossing | Main track |

CROXTON YARD

| | | |
|---|---|---|
| 2.72 | West of Bridge 2.71 west of Croxton | D. L. & W. interchange |

PIERMONT BRANCH

| | | |
|---|---|---|
| 8.62 | Nanuet | Main track—east leg of wye |
| 18.00 | Suffern—Orange Ave. | Main and side tracks |

NEW JERSEY & NEW YORK RAILROAD

| | | |
|---|---|---|
| 8.60 | Carlstadt | Station switch |
| 14.85 | North Hackensack | Station switch |
| 23.60 | Park Ridge | Main track |

## INDUSTRIAL SIDE TRACKS

NEW YORK DIVISION

| *Location* | *Industry* |
|---|---|
| Rutherford | Hasselhuhn-Williams Coal Co. |
| Passaic | Anderson Lumber Co. |
| Clifton | New York Sash & Door Co. |
| Paterson | Leslie Elliot Boiler Works |
| Ridgewood | Young & Bortic |
| Hohokus | Nagles Coal Co. |
| Ramsey | T. J. LaRoe Coal Co. |
| " | Ramsey Lumber Co. |
| Mahwah | Ward Bros. Sand Co. |
| Ramapo | Ramapo Foundry & Wheel Co. |
| Goshen | Newberry Mfg. Co. |
| Otisville | L. R. Wallace Feed & Coal Co. |
| " | Erie Pitt track |

BERGEN COUNTY R. R.

| | |
|---|---|
| Rutherford | General Printing Ink Co. |
| Garfield | N. J. Worsted Co. |
| " | Atlantic Material Corp. |
| " | Stewart Fuel & Lumber Co. |
| " | Belmont Lumber Co. |
| " | Garfield Crystal Ice Co. |
| Plauderville | Castles Ice Cream Co. |

NORTHERN RAILROAD OF NEW JERSEY

| | |
|---|---|
| Ridgefield | Eastern Industries Corp. |
| " | Commercial Steel Casting Co. |
| Palisades Park | Palisades Park Lbr. & Supply Co. |
| Englewood | Highwood Coal Co. |
| " | Burns Bros. Coal Co. |
| " | Bucyrus—Erie Corp. |
| " | H. P. Cole Co. |
| Cresskill | Westervelt Coal Co. |
| Nyack | Nyack Ice & Coal Co. |

NEWARK BRANCH

| | |
|---|---|
| Kearny | Whyte Coal Co. |
| " | Congoleum-Nairn Co. |

NEW YORK & GREENWOOD LAKE RY.

| | |
|---|---|
| Montclair | John Blondel Coal Co. |

NEWBURGH BRANCH

| | |
|---|---|
| West Newburgh | Fabrikoid Co. |

NEW JERSEY AND NEW YORK R. R.

| | |
|---|---|
| Carlstadt | Franco American Chemical Co. |
| " | Jacques Wolf Co. |
| Woodridge | Bent Mfg. Co. |
| Hackensack | Fuel Service Co. |
| " | Fairmount Coal Co. |
| " | Bergen County Road Dept. |

## SPEED RESTRICTIONS

| | Miles per Hour |
|---|---|
| Passenger trains, except as otherwise specified | 60 |
| Milk trains, except as otherwise specified | 50 |
| Freight trains | 50 |
| Class R-1 and R-2 engines handling trains | 40 |
| Class R-3 and N-2 engines handling trains | 50 |
| Passenger, express or milk trains operated by freight engines | 50 |
| Bergen Tunnel | 25 |
| Trains entering Jersey City passenger station | 10 |
| Class K, H, N and Diesel engines, light or on trains, diverging movements over switches, Terminal Tower, or entering Jersey City passenger station | 5 |
| Light engines, or with cabooses only are restricted to 15 miles per hour below the permissible speed when handling a train, with a maximum of 45 miles per hour. | |
| Gas, electric and Diesel electric equipment towed or moved in trains. | |
| Series 5000–5015 | 60 |
| Series 19–20 | 25 |
| All Diesel switch engines | 35 |
| Trains hauling dead engines | 20 |
| Trains hauling wrecking derrick | 30 |
| Freight trains handling loaded covered hoppers and loaded series 37000 cars | 40 |
| Loaded cars carded Form 5432 | 30 |
| Freight trains handling loaded self-clearing hopper cars (except covered hopper cars and series 37000), and freight cars with six-wheel trucks, unless otherwise provided | 30 |
| Trains handling eight-wheel swivel truck cranes, steam shovels and other similar pivoted machinery | 30 |
| Spreader Cars must be handled with blades in trailing position | 30 |
| Conductors will notify engineers before leaving terminal whether or not such equipment in train, and engineers will not leave terminals until so notified. | |
| Trains entering or leaving sidings or yards, passing from double to single, single to double track, or through crossovers unless otherwise provided | 10 |
| Engines must not be operated backward at a speed to exceed 15 miles per hour on curves, over grade crossings, or through crossovers, and must not exceed 25 miles per hour at other points. Engines must not be operated backward beyond a point where a turn table or wye is located without authority from the Superintendent. Engines without engine trucks must not be operated to exceed a speed of 15 miles per hour. | |
| Interlocking switches, Grove Street, Straight movement | 30 |
| Diverging movement | 5 |
| Class R and S engines over Bridges 0.79, 0.69, 0.61, 0.52, between west end of Viaduct and 400 ft. east of Grove St. Tower | 15 |
| Grove Street to west end of Viaduct | 30 |
| Interlocking switches, Croxton | 25 |
| Curves 4, 5, 6, and 7 Croxton, M.P. 1.98 to 2.73 | 25 |
| Hackensack Drawbridge and switches | 30 |
| Trains making diverging movement through crossover between east and westbound main tracks east end of Hackensack River Drawbridge and movements to and from eastbound freight tracks | 15 |

### New York Division

| | |
|---|---|
| Passenger trains | 60 |
| Hackensack Bridge and Rutherford | 70 |
| East of Ramsey to Suffern, M.P. 26.00 to 30.90 track 1 on unrestricted track | 70 |
| Ramapo to Newburgh Junction, M.P. 32.87 to 45.00 on unrestricted track | 70 |
| Graham M.P. 80.00 to 86.00 east of curve 132 on westbound unrestricted track | 70 |
| Freight trains handling loaded self-clearing hopper cars (except covered hopper cars and series 37000), and freight cars with six-wheel trucks, between Port Jervis and Croxton via Graham Line and Bergen Co. R. R. | 40 |
| Except: Between Newburgh Jct. and Suffern | 30 |
| Graham and Newburgh Jct. (Main Line) | 30 |
| Ridgewood Jct. and Rutherford Jct. (Main Line) | 30 |



| | Miles per Hour |
|---|---|
| Milk trains consisting of all Class "A" milk cars | 60 |
| Track 3 to N. J. & N. Y. R. R. | 15 |
| Eastbound Bergen County to track 4, Rutherford Junction | 30 |
| Diverging movements through switches, Rutherford Junction | 30 |
| Except: Diverging movement through crossovers between Tracks One (1) and Four (4) and Two (2) and One (1) | 15 |
| Curve 10, Carlton Hill, M.P. 9.09 to 9.30 | 45 |
| Curve 11, Carlton Hill, M.P. 9.63 to 9.77 | 35 |
| Passaic River Drawbridge, and to M.P. 11.95 Summer St., Passaic | 25 |
| Class R and S engines over Bridge 12.47, Clifton | 15 |
| Curves 17, 18 and 19, east of Clifton, M.P. 11.97 to 12.41 | 40 |
| Diverging movement through switches at XW Tower | 15 |
| Passenger terminal tracks, Paterson | 15 |
| XW Tower and River Street, Paterson | 50 |
| Curve 25, east of Hawthorne, M.P. 17.40 to 17.51 | 40 |
| Curve 26, Ridgewood Junction, M.P. 19.95 to 20.16, westbound | 45 |
| Diverging movement through switches Ridgewood Junction | 30 |
| Curve 27, Hohokus M.P. 21.82 to 22.14 eastbound | 55 |
| westbound | 50 |
| Curves 29 and 30, east of Waldwick, M.P. 22.67 to 23.23 | 50 |
| Diverging movement through switches at Waldwick | 30 |
| Curve 35, west of Ramsey, M.P. 27.19 to 27.40, Track 1 | 60 |
| Curve 39, Suffern, M.P. 30.66 to 30.86, Track 1 | 50 |
| Tracks 3 and 4 | 30 |
| Curve 40, west of SF Tower M.P. 30.91 to 31.13 westbound | 40 |
| Curve 41, west of Hillburn, M.P. 31.90 to 32.06 | 50 |
| Curves 42 and 43, east of Ramapo, M.P. 32.08 to 32.62 | 50 |
| Curve 46, Sterlington, M.P. 33.36 to 33.93 | 65 |
| Curve 48, west of Sloatsburg, M.P. 35.17 to 35.33 | 60 |
| Curve 51, west of Sloatsburg, M.P. 35.80 to 35.95 | 60 |
| Curve 52, east of Tuxedo, M.P. 36.50 to 36.71 | 60 |
| Curves 53, 54, 55, 56, 57 and 58, west of Tuxedo, M.P. 37.29 to 38.52 | 40 |
| Curves 59, 60 and 61 west of Tuxedo, M.P. 38.59 to 39.53 | 60 |
| Curve 64, Southfield, M.P. 40.96 to 41.16 | 65 |
| Curve 68, east of Arden, M.P. 43.02 to 43.18 | 60 |
| Diverging movements through crossovers, Newburgh Junction | 25 |
| Curves 75 and 76, Monroe and Oxford, M.P. 49.67 to 50.91 | 50 |
| Curve 83, Otterkill, M.P. 55.40 to 55.95 | 50 |
| Curve 86, east of Goshen, M.P. 57.87 to 58.18 | 50 |
| Curves 87 and 88, Goshen, M.P. 58.32 to 58.96 | 40 |
| Curves 89 and 90, west of G. P. Tower, M.P. 59.02 to 59.92 | 50 |
| Curve 95, New Hampton, M.P. 62.62 to 62.89 | 50 |
| Curves 99 and 100, Middletown, M.P. 65.37 to 66.71 | 40 |
| Curve 105, east of Otisville, M.P. 73.38 to 73.68 | 40 |
| Curve 106, Otisville, M.P. 74.49 to 74.73 | 45 |
| Curve 107, west of Otisville, M.P. 75.52 to 75.85 | 50 |
| Curves 111 and 112 west of Otisville M.P. 77.64 to 77.15, eastbound | 50 |
| Curve 111, west of Otisville, M.P. 76.64 to 76.85, westbound | 55 |
| Curve 112, west of Otisville, M.P. 76.92 to 77.15, westbound | 50 |
| Curve 115, east of Graham, M.P. 77.72 to 78.64, eastbound | 50 |
| Curve 115, east of Graham, M.P. 77.72 to 77.96, westbound | 50 |
| Eastbound Main Line to eastbound Graham Line, Graham | 15 |
| Diesel Locomotives Curves 127, 128, 132 and 133 M.P. 86.65 to 83.82, eastbound | 40 |
| Curves 127 and 128, Rundle's Curve, and Black Rock, M.P. 83.82 to 84.46, westbound | 45 |
| Curve 132, east of Port Jervis, M.P. 86.04 to 86.40 | 40 |
| Diverging movements, Sparrowbush | 15 |
| M.P. 86.47 and Bridge 90.84, west of Sparrowbush, westbound | 40 |
| Steam Locomotives Bridge 90.84, west of Sparrowbush and Graham, eastbound | 40 |
| Diesel Locomotives Bridge 90.84, west of Sparrowbush and Port Jervis station eastbound | 40 |
| Diesel Locomotives Port Jervis station and Graham, eastbound | 50 |
| No. 3 Yard track PX yard office to east end Port Jervis yard | 25 |
| Third track east end Port Jervis yard to Graham | 25 |
| Over switches at Germantown bridge, Port Jervis yard, except diverging movement | 30 |

| Bergen County R. R. | Miles per Hour |
|---|---|
| Passenger trains | 60 |
| West of Garfield to east of Glen Rock, M.P. 11.70 to 18.00 on unrestricted track | 70 |
| Freight trains | 50 |
| Eastbound Bergen County to track 4, Rutherford Junction | 30 |
| Curve 1, Rutherford Junction, M.P. 8.97 to 9.21 westbound | 50 |
| Curve 1, Rutherford Jct., M.P. 9.21 to 8.97 eastbound | 35 |
| Curve 3, Garfield, M.P. 11.20 to 11.70 | 50 |
| Curve 6, Glen Rock, M.P. 18.13 to 18.44 | 50 |
| **Graham Line** | |
| Freight trains | 50 |
| Curve 1, west of Newburgh Junction, M.P. 45.05 to 45.23 | 30 |
| Woodbury Viaduct | 40 |
| Curve 12, east of Moodna Viaduct, M.P. 54.61 to 54.74 | 30 |
| Moodna Viaduct | 30 |
| Curve 13, west of Moodna Viaduct, M.P. 55.49 to 55.64 | 30 |
| MQ Crossing, Montgomery Branch | 40 |
| Diverging movements through crossover and through switches to Maybrook Loop track at O & W Bridge | 15 |
| MQ Crossing, Maybrook Loop Track | 15 |
| Otisville Tunnel | 40 |
| Curve 29, west of Otisville Tunnel, M.P. 82.82 to 83.16 | 40 |
| Graham Line to Main Line at Graham, westbound | 30 |
| Subway at Graham | 30 |
| **New York and Greenwood Lake Railway** | |
| Passenger trains | 60 |
| West of Forest Hill | 55 |
| Freight trains | 40 |
| Curve east of D. L. & W. Bridge, east of N. Y. & G. L. Jct. | 15 |
| Third track, N. Y. & G. L. Jct. to Croxton | 15 |
| Hackensack River Drawbridge | 25 |
| Curve east of Arlington | 45 |
| Passaic River Drawbridge, West Arlington | 20 |
| Class K-2, K-2A, K-4B, K-5,K-5 A, N-1-2-3 engines over Bridge 7.96, east of North Newark | 20 |
| Curve east North Newark | 45 |
| Curve, Walnut St., Bloomfield | 40 |
| Class N-1-2-3 engines over Bridges 10.42, 10.47, 10.58 and 10.69 between Orchard St. and Glen Ridge | 20 |
| Between Label and Walnut St., Montclair | 30 |
| Extra trains and light engines, 11.30 P.M.-6.00 A.M., stop and flag over Walnut St., Montclair | 5 |
| Class K-2, K-2A, K-4B, K-5, K-5A, N-1-2-3 engines over Bridges 12.96 and 13.21, between Watchung Ave. and Upper Montclair | 20 |
| M.P. 13.75 to 14.00 Upper Montclair | 25 |
| First curve east of Great Notch, M.P. 15.90 to 16.30 | 40 |
| Diverging movements through crossovers Great Notch | 15 |
| Eastbound Caldwell Branch over spring switches Great Notch | 20 |
| Cedar Grove curve west of Great Notch | 40 |
| Train 500 over Main St. Crossing, Singac | 5 |
| D. L. & W. R. R. crossing, Mountain View | 30 |
| Riverdale curve | 40 |
| N. Y. S. & W. R. R. crossing, Pompton Jct. | 15 |
| Curve east of Wanaque-Midvale | 40 |
| Trains hauling wrecking derrick, eight-wheel swivel truck cranes, steam shovels, or other similar pivoted machinery | 30 |
| Belmont Ave. crossing, West of Wanaque-Midvale | 10 |
| Trains 534, 536, 539, 543, 545, 501, over Francisco and Stevens Ave. crossings between Great Notch and Little Falls (5 miles per hour) and avoid unnecessary whistling. Between hours of 9.00 P.M. and 6.00 A.M. extra trains and light engines will stop before proceeding over crossings | 5 |
| National Grain Yeast Co. and Jergens Lotion Co. sidings, Soho. | 5 |



| New Jersey and New York Railroad | Miles per Hour |
|---|---|
| Passenger trains: Jersey City and Spring Valley | 60 |
| Freight trains: Jersey City and Spring Valley | 40 |
| All trains: Spring Valley and Thiells | 20 |
| Trains hauling wrecking derrick, eight-wheel swivel truck cranes, steam shovels or other similar pivoted machinery | 30 |
| Temple Ave. crossing, Fairmount Ave. and Hackensack | 25 |
| Street crossings, first east and first west, of Westwood Station. | 25 |
| Class C-2, C-3, C-3A, K-5, K-5A, N-1-2-3, K-2 A engines over Bridge 21.20, east of Hillsdale | 20 |
| Over switch west of Oradell | 30 |
| Nanuet station and Nanuet Junction | 30 |
| Curve at Dykes crossing between Spring Valley and Nanuet | 35 |

**Hours of Crossing Protection**

| | Weekdays | Saturdays |
|---|---|---|
| Paterson Plank Road, Carlstadt | 6.30 A.M.- 9.30 A.M.<br>3.15 P.M.- 8.15 P.M. | 6.30 A.M.- 8.45 A.M.<br>12.30 P.M.- 6.15 P.M. |
| Essex Street, Hackensack | 6.25 A.M.-11.25 A.M.<br>4.50 P.M.- 7.50 P.M. | 6.15 A.M.- 8.30 A.M.<br>12.30 P.M.- 6.15 P.M. |
| Central Avenue, Hackensack | 6.15 A.M.- 9.15 A.M.<br>3.15 P.M.- 8.15 P.M. | 6.15 A.M.- 8.30 A.M.<br>12.30 P.M.- 6.15 P.M. |
| Clay Street, Hackensack | 6.15 A.M.- 9.15 A.M.<br>3.15 P.M.- 8.15 P.M. | 6.15 A.M.- 8.30 A.M.<br>12.30 P.M.- 6.15 P.M. |
| Berry Street, Hackensack | 6.15 A.M.- 9.15 A.M.<br>3.15 P.M.- 8.15 P.M. | 6.15 A.M.- 8.30 A.M.<br>12.30 P.M.- 6.15 P.M. |
| Passaic Street, Hackensack | 6.15 A.M.- 9.15 A.M.<br>3.15 P.M.- 8.15 P.M. | 6.15 A.M.- 8.30 A.M.<br>12.30 P.M.- 6.15 P.M. |
| Anderson Street, Hackensack | 6.15 A.M.- 9.15 A.M.<br>3.15 P.M.- 8.15 P.M. | 6.15 A.M.- 8.30 A.M.<br>12.30 P.M.- 6.15 P.M. |
| Maple Avenue, Hackensack | 6.15 A.M.- 9.15 A.M.<br>3.15 P.M.- 8.15 P.M. | 6.15 A.M.- 8.30 A.M.<br>12.30 P.M.- 6.15 P.M. |
| Clinton Place, Hackensack | 6.15 A.M.- 9.15 A.M.<br>3.15 P.M.- 8.15 P.M. | 6.15 A.M.- 8.30 A.M.<br>12.30 P.M.- 6.15 P.M. |
| Poplar Avenue, Hackensack | 6.15 A.M.- 9.15 A.M.<br>3.15 P.M.- 8.15 P.M. | 6.15 A.M.- 8.30 A.M.<br>12.45 P.M.- 6.30 P.M. |
| Main Street, at Fairmount Ave. | 6.15 A.M.- 9.15 A.M.<br>3.15 P.M.- 8.15 P.M. | 6.15 A.M.- 8.30 A.M.<br>12.45 P.M.- 6.30 P.M. |
| Temple Avenue, west of Fairmount Ave. | 6.15 A.M.- 9.15 A.M.<br>3.15 P.M.- 8.15 P.M. | 6.15 A.M.- 8.30 A.M.<br>12.45 P.M.- 6.30 P.M. |
| Bridge Street, River Edge | 6.15 A.M.- 9.15 A.M.<br>3.15 P.M.- 8.15 P.M. | 6.15 A.M.- 8.30 A.M.<br>12.45 P.M.- 6.30 P.M. |
| Kinderkamack Road, Emerson | 6.00 A.M.- 9.00 A.M.<br>3.00 P.M.- 8.00 P.M. | 6.00 A.M.- 8.15 A.M.<br>12.45 P.M.- 6.30 P.M. |
| Washington Ave, Westwood | 6.00 A.M.- 9.00 A.M.<br>3.00 P.M.- 8.00 P.M. | 6.00 A.M.- 8.15 A.M.<br>1.01 P.M.- 6.45 P.M. |
| Hillsdale Ave, Hillsdale | 6.00 A.M.- 9.00 A.M.<br>3.15 P.M.- 8.15 P.M. | 6.00 A.M.- 8.15 A.M.<br>1.01 P.M.- 6.45 P.M. |
| Central Avenue, Pearl River | 5.45 A.M.- 8.45 A.M.<br>3.15 P.M.- 8.15 P.M. | 5.45 A.M.- 8.15 A.M.<br>1.15 P.M.- 6.45 P.M. |
| Main Street, Spring Valley | 5.30 A.M.-11.00 A.M.<br>5.45 P.M.- 8.30 P.M. | 5.30 A.M.-10.00 A.M.<br>1.30 P.M.- 7.00 P.M. |

On Sundays, Holidays and during period crossings not protected, trains and light engines will stop, send member of crew ahead and flag over crossings.

## TRAINS STOP FOR EMPLOYES

| Station | Weekdays | Sundays |
|---|---|---|
| Hackensack Bdge. | **104, 140, 175** | **140, 151, 175** |
| County Road | **100, 152, 604, 610, 108, 124, 162, 128, 136, 138, 142, 166, 140, 168, 148, 174, 176, 178,** (**104** Hol. only), (**232, 258** Saturday only) **101, 151, 153, 105, 109, 113, 115, 117, 613, 689, 161, 69, 175, 177, 179,** (**141, 147, 157** except Saturdays) (**251, 255, 235** Saturday only) | **152, 108, 138, 140, 174, 176, 178**<br>**151, 115, 117, 751, 143, 175, 177** |
| N. Y. & G. L. Jct. | **302, 543, 499** (**502** Sat.) | **580, 543, 513** |

## General Instructions

Conductors and trainmen, departing from each station, must make the announcement "The next station is ———," and arriving at each station, call the name of that station twice, clearly and distinctly, in each coach.

When stationed alongside their trains at Jersey City Station, they must indicate their trains by using the words "On this side" instead of "On your left" or "On your right."

When loading their trains at way stations such as Paterson or North Bergen, where trains leave in the same direction, but destined to different points, they must announce to boarding passengers the route the trains will take.

When departing stations previous to arrival at a junction where passengers change cars, they must announce "The next station is ———, change cars for ———" (naming stations which connecting train will reach) and arriving at such junctions, they will repeat the announcement "Change cars for ———" and add "Train on the left or right," as case may be.

When announcing N. Y. S. & W. trains at Jersey City, trains must be called "N. Y. S. & W." and not "Susquehanna."

The following instructions govern passenger train crews loading and starting trains at Jersey City passenger station: The conductor must, when possible, examine the train indicator in subway waiting-room and confer with the subway usher to see that the latter understands what train is to be loaded.

He must assign member of crew to be stationed at rear end of his train to direct passengers and prevent them from boarding deadhead cars, which may be behind his train.

He must be stationed at head of subway stairs to direct passengers and in case he finds it necessary to leave that point, he must station member of crew there until he returns.

When scheduled time of departure has arrived and train has received green signal indicating boat passengers have all arrived, conductor must give subway usher a hand signal to close the gate.

Conductors and trainmen stationed alongside their trains at Jersey City must inform themselves of the destination of trains which may be loading on the opposite side of same platform, in order to answer inquiries of passengers. Passengers inquiring for trains that are not being loaded from the same platform should be directed to ushers.

Immediately before departure of passenger trains from Jersey City, a member of the train crew must announce, inside the cars, the destination of the train in the form of following examples:

"Main Line Express—Passaic, Paterson, Ridgewood," etc. Conductor will assign a member of his crew to perform this service.

In connection with the rules for operating steam heat on passenger trains, trainmen on eastbound trains must have steam blown out from equipment before arrival at Jersey City.

Trains operating with air-conditioned equipment will not blow steam out until passing Croxton Tower.

Uniformed agents of Union News Co. will be permitted to sell their merchandise on passenger trains except in Pullman, Business, Dining, or Parlor Cars, under direct supervision of conductor.

Conductors and trainmen when opening doors in passenger cars for the purpose of handling passengers at stations must see that doors are properly latched open.

Conductors and trainmen must keep toilet doors locked while trains are in Jersey City and other large stations and have them unlocked on westbound trains before passing Croxton, and when leaving other stations.

Passenger train employes must close windows of passenger cars before leaving their trains at terminals.

Uniformed employes must not wear uniform caps while dead-heading on passenger trains.

Employes dead-heading on passenger trains must not occupy parlor cars and smoking compartments in lounge cars.

Employes must not occupy seats in passenger trains to the exclusion of paying passengers and must vacate seats when paying passengers are standing.

Employes in train and engine service, while dead-heading, must not take part in card games.



Passenger conductors and trainmen must prevent passengers destined to terminal stations from riding beyond station platforms and prevent passengers from boarding trains at such terminals until trains arrive at stations.

Passenger conductors and trainmen must not touch passengers boarding and leaving cars, except small children, invalid or feeble passengers, but they must stand prepared to give assistance should it be warranted.

Passenger conductors must report at Dispatcher's office, Jersey City, for orders thirty minutes before leaving time of each train, except that in case of crews on short turn around time, conductors will report as soon as possible after arrival.

Passenger conductors must bring train slips for eastbound trains to Dispatcher's office, Jersey City, as soon as possible after arrival.

Lost articles found on trains, boats or about stations must be turned in or forwarded under register to Lost and Found department, Jersey City. If unclaimed for 60-day period, articles will be surrendered to finder. Perishable articles will not be retained beyond a reasonable time.

Conductor will arrange for search of each car in train after passengers are unloaded for lost articles and will report any unauthorized person who attempts to search equipment.

Conductors must keep record of seals on carload lots of baggage, such as theatrical baggage, and be prepared to furnish full information in case claim is made for loss.

When trains are instructed to omit regular stops, conductors and trainmen must be careful to make announcement so that passengers will not board train for stations at which stops are omitted. Where a train has sidetracked and is to give its passengers to following train, conductors must get in touch with Dispatcher as to stops train will make in handling passengers and make announcement to passengers regarding the stops.

At highway grade crossings equipped with automatic visual warning signals, but not equipped with cutout controls and no crossing watchman on duty: When a train or engine stops or is switching, or cars are left standing within operating limits of automatic highway crossing signals, causing warning signals to operate more than 5 minutes, member of crew or other qualified employe must be stationed at the crossing, to direct highway traffic and pedestrians safely over crossing and make every effort to avoid delay to such traffic.

Under no circumstances must a car without brake (either air or hand) be handled behind caboose even when chained. A car may be handled behind caboose when necessary, provided the air can be coupled through and is in working order or when there is a good hand-brake available, but in doing so car must be chained to the caboose and a trainman stationed on such car.

At the completion of each trip, when a caboose is to be unoccupied, conductors and trainmen must know that the fire is removed from the stove and all lights extinguished before leaving same.

When a car is set out of a train at any point on account of a hot journal, trainmen will extinguish fire before leaving car.

Powdered chemical for extinguishing fires in hot boxes of freight cars has been distributed to all pool cabooses. Following instructions will govern use of same: "Throw half of the powder from tube directly on blaze and close box lid. Wait one minute then open box, distribute remainder of powder over hot journal and close box lid. This prevents dope from taking fire again after car is set out. Car Must Be Set Out After Powder Has Been Used. Important—Box lid must be closed tight after powder is applied."

Freight conductors must transcribe tonnage carefully from way-bills to wheel reports and add up the tonnage in transit. In case total tonnage does not agree with tonnage reported out of terminal, they must telegraph the Superintendent from the first available point, advising him the correct tonnage of the train.

Conductors must examine carefully releases held by attendants in charge of live stock to see that they are in proper form and date and that the attendant is the signer of the release.

Freight conductors must show on their train slips the time of arrival of their trains at terminals.

Freight conductors must leave at stations where they take on or leave cars, train slips properly filled out to show the cars so handled.

Passenger trains when blocked off by freight train at a station not

protected by underpass or overhead bridge will wait until freight train clears and passengers have had opportunity to board train. When delay will exceed 5 minutes, communicate with Train Dispatcher.

Cars placarded "Explosives" must be placed in through freight trains near the middle of the train, and at least 15 car lengths from the engine, electric locomotive or motor car, and at least 10 car lengths from the caboose, if the length of the train will permit.

Cars placarded "Explosives" may be placed in local freight trains, not closer than one car length from the engine, electric locomotive or motor car or caboose.

Train or engine crews, using sidings leading from the main track, and finding switch lights unlighted, must light same and make report to Superintendent.

Trainmen before entering a car containing gasoline must leave the car door open a sufficient period of time to allow gases to escape before entering the car with a light.

Employes must observe passing trains, and if any hot journals, defective brakes, defective running gear, flat wheels, etc., are observed, trainmen will be notified by use of following code:

HOT JOURNALS.
By day—Hold nose with first finger and thumb of right hand and point down toward track with left hand.
By night—Hold lantern in hand by the guard wires around the globe and swing in small vertical circle.

CONNECTIONS DRAGGING.
By day or night—Give stop signal.

CAR DOOR SWINGING OR ABOUT TO FALL.
By day—Raise hand above head and hold it stationary.
By night—Same signal with lantern, in addition give stop signal.

BRAKES STICKING.
By day—Shove hand in sliding movement from body.
By night—Same signal with lantern, in addition give stop signal.

FLAT WHEELS.
By day—Place palms of both hands together in horizontal position.
By night—Hold lantern at arm's length with globe in horizontal position.

ALL CLEAR.
By day or night—Proceed signal.
Care will be taken that the above code signals are not used with passing trains, as sign of greeting.

## SPECIAL INSTRUCTIONS

### New York Division

Instructions for crews operating on N.Y.O. & W. RR. Middletown:

Conductor call Train Dispatcher from East Main St. for permission to cross over to North or Westerly track and on arrival at Wickham Ave. procure permission to proceed to Crawford Jct. and return to Main St. report clear at Crawford Jct. and on return at Crawford Jct. procure permission from Train Dispatcher to cross over to South or Eastbound track and on arrival at "DW" Middletown, report to Erie operator time of arrival and clear of N.Y.O. & W. tracks. Operator DW will telephone this information to Dispatcher N.Y.O. & W.

Third track between Middletown and Howells Jct. will be blocked with stored engines, 200 feet west of water crane at Middletown Summit: weekdays 5.00 P.M. to 7.30 A.M. Saturday 5.00 P.M. until 7.30 A.M. Monday. Trains and engines will secure permission before using same. Hand operated derail with light, located 1248 feet west of Middletown Summit water crane, protects engines stored at that location.

Third track between West Main Street and Main Street, Middletown, is operated as single track. Any train or engine other than engines and outfits of scheduled Middletown terminal trains will secure permission from operator at Middletown to use same.

Movement of equipment trains or other switching movements between XW Tower and passenger terminal tracks, Paterson, will be governed by Operating Rule No. 93. Schedule trains have right of track on single track lead at east end of terminal tracks.

Class R and S engine restrictions:
Passaic Park Drawbridge.
Pine Island Branch. Newburgh Branch. M. & C. Branch.
Montgomery Branch, between a point 1½ miles east of O. & W. Crossing and Montgomery. All sidings Rutherford to Graham, inclusive, Main Line and B.C.R.R., except:

| | |
|---|---|
| Otisville: | No. 1 westbound station switch and No. 2 station switch to cattle chute. |
| Howells: | Station switch. |
| Middletown: | 3rd track Middletown to Middletown Summit No. 1–2 yard tracks, Armour & Co. siding, Tank switch to east end of Swift & Co. Bldg., eastbound siding and coal bin switch Middletown Summit. |
| Goshen: | Westbound siding, local team track, Nos. 2 and 3 eastbound yard tracks, yard tracks 1 and 2 westbound yard, scale track and interchange track and long siding on Montgomery Branch. |
| Greycourt: | Yard tracks 1–3–4–5 and long switch and around Wye. |
| Oxford: | Station switch to point of clearance. |
| Monroe: | Foundry switch and freight house switch. |
| Harriman: | Westbound station siding. |
| Newburgh Jct: | Westbound siding to bridge 44.54, track 3, storage track and wye. |
| Arden: | Station switch to a point 250 feet east of clearance point. |
| Southfields: | Station switch. |
| Tuxedo: | Westbound station switch No. 1, eastbound and westbound switch at East Tuxedo. |
| Sloatsburg: | Station switch. |
| Sterlington: | Storage track and eastbound siding. |
| Ramapo: | Storage track. |
| Hillburn: | Westbound siding. |
| Suffern: | West end middle track—east entrance to yard |
| Ramsey: | Westbound siding. |
| Waldwick: | East leg of Wye to Water Crane. |
| Ridgewood Jct: | Eastbound and westbound sidings. |
| Rutherford Jct: | East end new switch to clearance point, west end freight house track No. 1, and Nursery and Grand Union Co. siding (B.C.R.R.). |
| Garfield: | Eastbound long siding. |

Enginemen of eastbound passenger trains stopping at Rutherford must stop their engines at the east end of the inter-track fence to minimize the blocking of Park Avenue crossing.

A train must not pull into station at Rutherford, or pass over Park Avenue crossing when passenger train is standing at station.

Engines are restricted in (Tilo) track Flintkote Yard Rutherford.

Automatic cut out device at Central Ave. Crossing, East Rutherford, B.C.R.R. governing westbound track, located on white board, east wall, inside of Crossing Watchman's Cabin: Between hours of 7.00 P.M. and 11.00 P.M., trains occupying westbound track east of crossing while switching in Rutherford yard, member of crew will press cutout button which will cut out flashing light crossing signals. Flashing light signals will automatically be restored when train clears westbound circuit.

A train must not pull into station at Carlton Hill or pass over crossing when passenger train is standing at station.

When cars are left on track 1, at Monroe Street, Passaic yard, they must be placed to clear the sidewalks by at least ten feet, to give the crossing watchmen a proper view of street traffic.

Passenger conductors must have member of crew stationed near subway steps while making station stop Passaic to protect late passengers who may ascend steps when train is ready to depart.

Passenger trains will stop with rear car clear of Jefferson Street crossing at Passaic.

Passenger trains making stop at Clifton must not stop with passenger cars on bridge over Clifton Ave., west of station.

Westbound passenger trains having express or baggage cars making station stop at Paterson will stop first coach at east end of Market Street. Trains without express or baggage cars stop engine at east end of Market Street.

Box cars over 13′ 6″ in height are restricted from all passenger terminal tracks Paterson. (Lower Level).

Eastbound passenger trains making station stop at Paterson will stop with rear car at Market Street kiosk.

Trains making station stop River Street, Paterson, will stop with entire train west of bridge over River Street to prevent passengers leaving or boarding trains on bridge.

Westbound trains making station stop Glen Rock Main Line and B.C.R.R., will stop with engine east of Rock Road Crossing.

Eastbound passenger trains making station stop at Glen Rock Main Line stop with rear end of train clear of road crossing at west end of station.

Westbound passenger trains making station stop Ridgewood, stop with engine at west end of platform.

When cars are left in the east siding at Ridgewood Junction they must be placed at the west end of the siding to avoid delay to following trains setting out cars at that point.

Engines heavier than Class H restricted in City switch Ridgewood.

"Light" indicator on eastbound waiting room Hohokus operated by Agent: When yellow light displayed, trains making station stop 7 A.M. to 5 P.M. except Sunday and Holiday wait until light is extinguished, which indicates all passengers have boarded train. Trains finding light displayed at other hours will disregard same and make report.

Engines turning on the wye at Waldwick must be accompanied to and from the water crane by a trainman to throw switches and protect the movement.

Class K and N engines are restricted from operating on Yard Tracks leading from east leg of wye at Waldwick.

R and S engines are restricted on west leg of wye at Waldwick.

Engines are restricted inside Ruffner Lumber shed at Ramsey.

Eastbound passenger trains making station stop at Ramsey stop with rear car east of Main St. crossing; westbound passenger trains making station stop will stop with rear car west of crossing.

Auto manual control circuits controlled by gatemen at Main St. crossing Ramsey to cut out flashing light highway crossing signals at Central Ave. crossing, when trains are switching in this vicinity.

Sign at west end of Cut Section, Track 1, located 975 feet west of Main St. crossing reads "End of Crossing Circuit Track 1." Trains making station stop on Track 1 will not pass this sign.

Sign at west end of Cut Section, Track 4, located 800 feet west of Central Ave., reads "End of Crossing Circuit Track 4." Trains stopping on Track 4 will not pass end of Circuit sign except when intending to leave part of train on Track 4, in which case stop will be made so that portion of train to be left will be west of sign.

When westbound trains stop at Ramsey with head car or cars beyond station platform, trainmen will request passengers to alight from coach steps adjacent to station platform.

Class K and N engines are restricted on curve of Rockland Coal Co. siding, Sloatsburg and Yard Tracks, Ramapo.

Engines and cars with capacity of over 70 tons are restricted on coal trestle at Tuxedo.

Engines are restricted on trestle Pyridium Corp. siding Harriman.

Trains operating from Newburgh Branch at Greycourt must not occupy main line without permission from Train Dispatcher.

L. & H. Ry. tracks at Greycourt will not be used without permission from L. & H. Ry. Telephone located outside station.

Class N engines restricted in sidings Chester and New Hampton.

N. Y. N. H. & H. R. R. tracks between Campbell Hall and Maybrook are operated under yard limit rules. Rules 93 and 99 will apply.

Westbound train must not pull into station at Goshen while eastbound passenger train is standing at station and will look out for passengers crossing track after eastbound train departs.

Class K & N engines restricted in Finans siding, Goshen.

Engines are restricted on Conklin & Cumming siding, Goshen.

Eastbound train must not pull into station at Middletown or pass over James St. crossing while westbound passenger train is at station and will look out for passengers crossing tracks after westbound train departs.

Westbound passenger trains with more than 8 cars, stop with rear of engine tender at west end of station platform, Middletown.

When using Wallace Feed Co. siding at Middletown, trainman must walk ahead of cars or engine when passing over North St. crossing.

Class N-3, R and S engines are restricted from operating over Sprague Avenue Bridge, M. & U. R. R. Terminal; engines are restricted from operating on track scales in Hospital switch.

When cars are left in Taylor's siding or in westbound siding at Middletown, they must not be placed within 50 feet of Harding Street Crossing to clear crossing bell circuits.

Class K & N engines restricted in R. G. Wood Coal Co.—O. M. Gregory—Clemson—H. D. Gould—Beakes & Doty and State Hospital sidings, Middletown.

Engines are restricted in Fish switch Howells Jct. west of derail.

Gas electric motor cars 5000 series must not be operated through Bergen or Otisville Tunnels except in emergency.

Engines are restricted in Holley's two sidings Otisville east of frog.

Head trainmen of freight trains must meet engines at water crane, Port Jervis, and remain with them until placed on trains.

Portable telephone outfits, on passenger, freight, and wrecking trains, also emergency outfits, must be inspected once every three months.

County Road crossing Secaucus—During daylight hours when crossing gates are raised and in an upright position, a red flag will be displayed from the crossingman's tower and at night a red light will be displayed from the same point to indicate that vehicular traffic is moving over crossing and no train movements are to be made over the crossing when such signals are displayed.



Class J-2 engines restricted Hackensack Bridge to Croxton Tower main line, through Bergen Tunnel and Bergen Archways.

Class R and S engines may be operated Hackensack Bridge to Jersey City with following restrictions: Operate on tracks 3 and 4 only Croxton Tower to Jersey City and on to depot tracks 6 and 9. No crossover movements except at Croxton Tower and Grove St. Tower tracks 4 to 3 to Yard running track 7.

Eastbound Color Light repeater dwarf signal is located on north wall of Bergen Tunnel 635 feet west of east end of tunnel. This dwarf signal will repeat indications of interlocking dwarf signal governing eastbound movement from westbound tunnel tracks at OS Tower.

An Absolute Block will be operated between Grove St. and Croxton Towers, through Bergen Archways and between Croxton and OS Towers through Bergen Tunnel, following movement of light engines, and motor cars.

Eastbound signals on tracks 1–2–3–4 at east end of Boulevard Arch, Bergen Archways, are automatic block signals, located close to the ground for vision purposes. When in stop position, member of crew communicates with Croxton Tower by telephone for permission to proceed. Rules 281–285–292 of Operating Dept. govern.

When westbound signals at Boulevard Arch, Bergen Archways, are in stop position, member of crew will get in immediate communication with Croxton Tower on telephone.

Class K-5-A, engines 2935 to 2944 and 2960, and Class K-5 engine 2923 equipped with roller bearings must not be permitted to enter water on Jersey City station track 12 in high tide.

Diesel Engines, Motor Cars and Roller bearing equipped freight and passenger cars must not be operated in water that is higher than underside of ball of rail.

Freight cars over 14 feet, 9 inches in height are restricted in Jersey City Passenger Station Tracks.

Grove Street Tower, Croxton Tower and Jersey City Terminal Tower are equipped with a whistle to be used by towermen in case of emergency in calling attention of enginemen to any condition involving the safety of trains.

Following code will govern: One long blast.....Stop.

Any train or engine of whatever direction in the vicinity of any of these towers will, upon the sounding of emergency whistle, bring their train or engine to full stop, and not proceed until it has been ascertained that the way is clear for movement.

Two short blasts....Proceed, if you have signal.
Four short blasts....Call for maintainer.
Six short blasts.....Call attention of enginemen and trainmen to signal from towerman.

Trains will not be backed out of Jersey City passenger station until proper hand signal has been received from trainmen or yardmen on rear of train in addition to the prescribed air whistle signal. Conductors of trains of over eight cars arriving at Jersey City between 7.30 A.M. and 9.30 A.M. must assign member of the crew to watch for hand signal from the rear man, on account of curve preventing enginemen from seeing rear man. Trainmen will see that engine is uncoupled from train by car couplers before turning train over to yard force on all trains arriving at Jersey City except between the hours of 7.00 A.M. and 9.30 A.M.

Enginemen backing passenger trains into Jersey City station, having been brought to a stop by the air hose operated from the rear of the train, must not back farther until they have received a hand signal in addition to the regular whistle signal.

In connection with the rules and instructions for operating air brakes and trains:

Trains leaving yards for passenger station:

After the extension hose has been coupled to the rear end, before the train is moved, the yard conductor, switchman, or trainman in charge of the train must make an application of the brakes through the extension hose; the engineman must know that a sufficient reduction in pressure has been made to apply the brakes on the entire train. After this application has been released, switches set, and the proper signal given, the train will proceed to the passenger station. While the train is en route, and until the same has come to a full stop in the passenger station, engineman will keep close watch and observe that the speed of the train is properly controlled. When the same is not done, his knowledge of consist of train and its location will indicate to him whether or not train should be stopped, and he will be governed accordingly.

When a train handled by a switch engine has been stopped in the passenger station, the extension hose will not be removed from the brake hose connection until after the engine has been cut off.

When empty trains are to be moved from the passenger station, the men handling the extension hose will make test of the brakes before giving signal for the train to move.

The maximum speed of trains from the passenger station to the storage yards or from the storage yards to the passenger station, will be ten (10) miles per hour, a further reduction to be made at any point where the men handling the air cannot see the track ahead is clear for a maximum speed of ten (10) miles per hour.

Trains must not be moved between Jersey City passenger station and coach storage yards without back-up hose on the rear car, controlled by trainman or yardman qualified to handle same.

When cars too high for tunnel are handled through Bergen Archways, they will be operated on tracks 3 and 4 only.

The two principal tracks extending from OS Tower, Jersey City, to Weehawken Yard, are running tracks. The first track directly adjacent to the New York Central & Hudson River Railroad is designated as westward track and the second track as eastward track. Eastbound movement from Bergen Tunnel over these tracks will be made on signal indication at OS Tower.

Movements of trains or engines from Jersey City to Monmouth Street Yard will be made on signal indications. Conductor of trains or engines operating from Jersey City or Monmouth Street Yards to Weehawken Yard will secure permission at Monmouth Street Yard from OS Tower by telephone before making movement. Towerman at OS Tower will specify track to be used. Conductor will secure permission from Towerman at OS Tower by telephone before making westbound movement from Weehawken Yard. Towerman at OS Tower will specify track to be used. Crossover movements at First Street and Thirteenth Street, Hoboken, will not be made, except on permission from Towerman at OS Tower. Trains and engines must move over these tracks prepared to stop unless track is seen or known to be clear.

N. Y. C. & H. R. R. crews desiring to cross Erie tracks at First Street, Hoboken, Weehawken Branch, must secure permission from Operator OS Tower. Trains and engines must move over these tracks prepared to stop unless track is seen or known to be clear.

Third track between Croxton and New York & Greenwood Lake Jct. is operated under the following rules:

From 4.30 A.M. until 11.30 A.M. for westbound freight trains.
From 11.30 A.M. until 4.30 A.M. for eastbound freight trains.

This track will at all times be operated under yard limit rules. Trains failing to clear track at time current of traffic reverses will protect by flag. Trains to or from Croxton Yard during the reverse period will operate on main tracks in proper direction.

Tracks Three (3) and Four (4) between Granton Junction and Lundys Lane are operated under Yard Limit Rules, and are used as storage tracks.

## Graham Line

Enginemen entering portal of Otisville Tunnel in both directions will sound whistle and ring bell in accordance with rule 30.

The signals governing movement of trains through Otisville Tunnel in both directions are of square blade design. When in stop position trains will not pass them. If these signals remain in stop position, flagman will be started immediately through tunnel and report from opposite end of tunnel before train proceeds. Trap circuits have been installed on the east and westbound tracks through Otisville Tunnel, and are to be operated in the following manner by light engines or trains of five cars or less:

WESTBOUND.—Light engine or light train after receiving signal to proceed will stop 30 feet ahead of signal at east end of tunnel and push button located on the back of signal pole for a period of ten (10) seconds. After this has been done, proceed through the tunnel and stop at key box located on concrete post 1200 feet west of west end of tunnel and release tunnel signals by inserting switch key in circuit controller, turn to right as far as possible, for a period of 5 seconds, then turn key to left and remove.

EASTBOUND.—Light engine or light train after receiving signal to proceed will stop 30 feet ahead of signal at west end of tunnel and push button located on back of signal for a period of ten (10) seconds. After this has been done, proceed through tunnel and stop at key box located on concrete post 725 feet east of east end of tunnel and release tunnel signals y inserting switch key in circuit controller, turn to right as far as possible for a period of 5 seconds, then turn key to left and remove. Trains finding either tunnel signal in stop position will be governed by timetable instructions and will stop with rear end of train clear of tunnel at the key box at opposite end of tunnel and release tunnel signals by inserting switch key in circuit controller, turn to right as far as possible for a period of 5 seconds, then turn key to left and remove.

Light engines or trains must push button before entering tunnel in either direction.

Trains and engines occupying Maybrook Loop Track at MQ between O & W bridge, west of MQ Tower and Montgomery Branch, must be protected in accordance with rule 99.



Track over Moodna Viaduct for a distance of 3500 feet is single track, governed by interlocking signals at both ends, controlled by signalman at BS Tower. When eastbound signals located 895 feet west of viaduct are in stop position, eastward trains will not proceed until permission has been procured over the telephone from signalman and flagman sent in advance to insure that track is clear and switches at each end are properly set.

West end of single track is equipped with automatic spring type switch, normal position for westward track.

East end of single track is equipped with hand throw switch, located at BS Tower, operated by Towerman.

Eastward trains on eastward track will complete entire movement over spring switch before a reverse move is made.

Dwarf interlocking signals are located between tracks at each end of viaduct for trains making reverse movement. Reverse movement westward, spring switch will be operated by hand and restored to normal position after move completed. Westward trains having received permission to pass westbound interlocking signal in stop position will stop and examine spring switch at west end of viaduct.

Class R and S engine restrictions:

All sidings Newburgh Jct. to Graham inclusive except:

| | |
|---|---|
| Newburgh Jct.: | Eastbound Cripple track. |
| Central Valley: | East and westbound station sidings. |
| Highland Mills: | Yard track. |
| BS Tower: | Westbound cripple track to clearance post. Eastbound cripple track to clearance post. |
| MQ Crossing: | No restrictions on any side tracks. |
| Red Onion: | Cripple track to clearance point. |
| Howells Jct.: | Westbound siding 500 feet from west end only. |
| Graham: | Eastbound cripple track. Westbound station track to clearance post. |

Telephones connecting with Train Dispatchers circuit:
Westbound automatic signal 53-1-E east of BS tower.
Woodbury Viaduct (west end)

## Newark Branch

End of double track Newark is controlled by hand throw switch. Normal position eastbound track, except between hours of 12.50 P.M. and 6.35 P.M. week days and Saturdays westbound track. No. 321 leave switch set for eastbound track.

Freight trains and engines will not pass over Passaic Street, first crossing west, and second crossing east of Newark Station until it is known that Gates are lowered.

Automatic flashing light signals Verona Ave., Woodside, have automatic cut-out controller, located at northwest corner of crossing. Train crews switching within 1200 feet of crossing will operate this device and member of crew protect crossing. Cut-in must be restored when switching is completed.

City of Newark ordinance prohibits blocking of any street within city limit for a period greater than three (3) minutes. No switching will be done so that detached cars will pass over any street at grade after cars detached from engine or train.

Swift & Co. lead to stock yard at Harrison is protected by gate equipped with white light by night. Crews desiring to enter will sound engine whistle and watchman will open gate.

Class R and S engines are restricted on Newark Branch.

Engines heavier than Class "C" are restricted in Woburn Degreasing sidings Harrison.

Engines heavier than Class "C" are restricted in Swift & Company, Harrison, except west end of Tracks 1-2-3 at stock unloading platform.

Drill crews must not obstruct 3rd Ave. and 4th Ave. crossings, Newark, within 5 minutes of arrival of eastbound passenger trains.

Class K-4 engines are restricted from operating in new delivery yard east of Passaic St., Newark, except in freight house tracks.

Class K-4 and N engines are restricted on track 2 Newark Yard.

Eastbound trains making station stop at Newark will stop with engine west of drawbridge signal.

Automatic Cut-out and Cut-in device at Washington Street, Nutley, controls located in crossing tower at southwest corner of crossing. Trains performing switching movements within the circuit limits of this crossing will operate this device from tower and member of crew protect crossing. Cut-in buttons must be restored when switching is completed.

Eastbound trains making station stop at Walnut Street will stop with train clear of Park Avenue Bridge.

Trains switching on New Jersey Coal and Supply Co. siding Walnut St., Nutley, must use 5 cars as reachers.

Engines restricted from operating in Broadbent Coal Company siding west of Franklin Ave.

When trains meet at Athenia, westbound trains will not exceed speed of five (5) miles per hour over Clifton Ave. crossing, east of station.

| Hours of Crossing Protection | Week Days | Saturdays |
|---|---|---|
| Schuyler Ave., Kearny | 6.10 A.M.–10.10 P.M. | 6.10 A.M.–10.10 P.M. |
| Davis Ave., Harrison | 6.10 A.M.–10.10 P.M. | 6.10 A.M.–10.10 P.M. |
| Grant Ave., Kearny | 6.10 A.M.–10.10 P.M. | 6.10 A.M.–10.10 P.M. |
| Passaic St., Newark | 6.05 A.M.–10.05 P.M. | 6.10 A.M.–10.05 P.M. |
| Fourth Ave., Newark | 6.05 A.M.–10.05 P.M. | 6.10 A.M.–10.05 P.M. |
| Third Ave., Newark | 6.05 A.M.–10.05 P.M. | 6.10 A.M.–10.05 P.M. |
| Chester Ave., Riverside | 6.05 A.M.–10.05 P.M. | 6.10 A.M.–10.05 P.M. |
| Grafton Ave., Woodside | 6.05 A.M.–12.01 P.M.<br>4.50 P.M.– 6.55 P.M. | 6.55 A.M.–10.55 A.M.<br>12.45 P.M.– 4.45 P.M. |
| Schuyler St., Belleville | 6.00 A.M.– 8.40 A.M.<br>1.30 P.M.– 6.50 P.M. | 6.40 A.M.– 8.40 A.M.<br>11.40 A.M.– 5.40 P.M. |
| William Ave., Belleville | 6.00 A.M.– 8.40 A.M.<br>1.30 P.M.– 6.50 P.M. | 6.40 A.M.– 8.40 A.M.<br>11.40 A.M.– 5.40 P.M. |
| Belleville Ave., Belleville | 6.00 A.M.– 8.40 A.M.<br>1.30 P.M.– 6.50 P.M. | 6.40 A.M.– 8.40 A.M.<br>11.40 A.M.– 5.40 P.M. |
| Rutger St., Belleville | 6.00 A.M.– 8.40 A.M.<br>1.30 P.M.– 6.50 P.M. | 6.40 A.M.– 8.40 A.M.<br>11.40 A.M.– 5.40 P.M. |
| Academy St., Belleville | 6.00 A.M.– 8.40 A.M.<br>1.30 P.M.– 6.50 P.M. | 6.40 A.M.– 8.40 A.M.<br>11.40 A.M.– 5.40 P.M. |
| Holmes St., Belleville | 6.00 A.M.– 8.40 A.M.<br>1.30 P.M.– 6.50 P.M. | 6.40 A.M.– 8.40 A.M.<br>11.40 A.M.– 5.40 P.M. |
| Joralemon St., Belleville | 6.00 A.M.– 8.40 A.M.<br>1.30 P.M.– 6.50 P.M. | 6.40 A.M.– 8.40 A.M.<br>11.40 A.M.– 5.40 P.M. |
| Little St., Belleville | 6.00 A.M.– 8.40 A.M.<br>1.30 P.M.– 6.50 P.M. | 6.40 A.M.– 8.40 A.M.<br>11.40 A.M.– 5.40 P.M. |
| Washington St., Nutley | 6.00 A.M.– 8.40 A.M.<br>11.40 A.M.– 7.00 P.M. | 6.40 A.M.– 8.30 A.M.<br>11.30 A.M.– 5.40 P.M. |
| Grant Ave., Nutley | 6.00 A.M.– 8.40 A.M.<br>1.40 P.M.– 7.00 P.M. | 6.40 A.M.– 8.30 A.M.<br>11.30 A.M.– 5.40 P.M. |
| Highfield Lane, Nutley | 6.00 A.M.– 8.40 A.M.<br>1.40 P.M.– 7.00 P.M. | 6.40 A.M.– 8.30 A.M.<br>11.30 A.M.– 5.40 P.M. |
| Kingsland Road, Nutley | 6.00 A.M.–12.01 P.M.<br>5.00 P.M.– 7.00 P.M. | 6.40 A.M.– 8.30 A.M.<br>11.30 A.M.– 5.40 P.M. |
| Bloomfield Ave., Allwood | 5.55 A.M.–11.50 A.M.<br>5.05 P.M.– 7.10 P.M. | 6.45 A.M.–10.45 A.M.<br>12.50 P.M.– 4.50 P.M. |
| Van Houten Ave., Athenia | 5.50 A.M.–11.45 A.M.<br>5.15 P.M.– 7.20 P.M. | 6.40 A.M.–10.40 A.M.<br>1.01 P.M.– 5.00 P.M. |
| Clifton Ave., Athenia | 5.50 A.M.–11.45 A.M.<br>5.15 P.M.– 7.20 P.M. | 6.40 A.M.–10.40 A.M.<br>1.01 P.M.– 5.00 P.M. |
| Main St., South Paterson | 5.45 A.M.– 9.45 P.M. | 5.45 A.M.– 9.45 P.M. |
| Getty Ave., South Paterson | 5.45 A.M.– 9.45 P.M. | 5.45 A.M.– 9.45 P.M. |

On Sundays, Holidays, and during period crossings not protected all trains and engines stop, send member of crew ahead, and flag over crossing.

| TELEPHONES | Connection | |
|---|---|---|
| Bergen Archways | Croxton | Tower |
| 1500 feet east Hackensack River Bridge | HX | " |
| 1000 feet west Hackensack River Bridge | HX | " |
| At Crossover east of N. J. & N. Y. Jct. | HX | " |
| Cabin Park Ave. Crossing Rutherford west side | BJ | " |
| On westbound signal bridge (south side) 750 feet east of Rutherford Jct. | BJ | " |
| Eastbound home signal BCRR Rutherford Jct. | BJ | " |
| 2000 feet west of Rutherford Jct. | BJ | " |
| Gregory Ave., Passaic | BJ | " |
| West end of Harrison Street station | MonroeSt. | Tower |
| Lake View front of station | XW | " |
| 2000 feet east Newark Jct., lead to westbound yard | XW | " |
| West end of westbound yard, Paterson | XW & WJ | " |
| 100 feet east of Ellison St., Paterson (west side) | XW & WJ | " |
| 500 feet west River Street station, west track | XW | " |
| Fifth Avenue crossing gate tower | XW | " |
| Hawthorne, front of station | WJ & XW | " |
| Ridgewood, Young and Bortic siding | WJ | " |
| Ridgewood Junction, eastbound home signal | WJ | " |
| Hohokus, opposite bleachery | WJ & WC | " |
| Waldwick, front of station | WC | " |
| Waldwick Yard, engine foreman's office | WC | " |
| Waldwick, west end yard | WC | " |
| Foundry Switch, West Mahwah | WC & SF | " |
| Track 1 east of water crane, Suffern | SF | " |
| Suffern engine foreman's office | SF | " |
| Crossing east of Hillburn on westbound side | SF & TC | " |
| Ramapo, west track at crossover | SF | " |
| Sterlington, front of station | SF | " |
| West end of eastbound siding, Sterlington | SF & TC | " |
| Newburgh Jct., east end of yard | NJ | " |
| Newburgh Jct., west leg wye | NJ | " |
| Pyridium Corp. siding, east of Harriman | NJ | " |
| Harriman water crane | NJ | " |
| East end Greycourt yard, opposite water tank | GB | Station |



| | | |
|---|---|---|
| East end Goshen yard | GP | Tower |
| One mile west Goshen, west end, passing siding | GP | " |
| Scotts Town crossing, Pine Island Branch, Goshen | GP | " |
| M. & U. R. R. engine yard, Main St., Middletown | DW | " |
| Middletown Summit | FX | " |
| East end of eastbound siding and west end of westbound siding, Middletown Summit, Howells Jct. | FX | " |
| Howells Junction | FX | " |
| Otisville Creamery switch | FX | " |
| Otisville Summit crossover | FX | " |
| Quarter mile east M.P. 81 | FX | " |
| Graham, front of station | FX | " |
| East end Black Rock Cut | FX | " |
| Half mile east M. P. 85 | FX | " |
| East end yard, Port Jervis | FX & PO | " |

## B. C. R. R.

| | | |
|---|---|---|
| At light indicator 600 ft. west of Plank Rd. crossing | BJ | Tower |
| Plank Road crossing, gate tower | BJ | " |
| East end oil switches | BJ | " |
| Hammersley's Siding, west end oil switches | BJ | " |
| Hobart Place, Garfield | BJ | " |
| Garfield, east leg of wye | BJ | " |
| Garfield, at Crossover, west of Monroe Street | BJ | " |
| East end of siding, Plauderville | BJ | " |
| Market St. gate tower, east of Coalberg Jct. | BJ | " |
| Signals 14–1–B, 14–2–B, Coalberg Jct | WJ | " |

## Newark Branch

| | | |
|---|---|---|
| Entrance to loop, D. L. & W. Bridge, west Croxton | Croxton | Tower |
| Westbound signal east end bridge N. Y. & G. L. Jct. | DB | " |
| Quarter mile west N. Y. & G. L. Jct. | DB | " |
| Crossover Kearny | Newark | Station |
| Schuyler Avenue, east of Harrison | " | " |
| Davis Ave. gate tower, Harrison | " | " |
| Congoleum Switch | " | " |
| Newark Drawbridge | " | " |
| Woodside, front of station | " | " |
| Riverside gate tower | " | " |
| Cemetery Switch, Newark yard | " | " |
| Outside South Paterson station | XW | Tower |

## Graham Line

| | | |
|---|---|---|
| Arden House | NJ | Tower |
| Newburgh Junction north leg of wye | NJ | " |
| Central Valley crossover | NJ | " |
| Highland Mills | NJ | " |
| Signal 53–1–E east BS Tower, train order signal | BS | " |
| West end Moodna Viaduct | BS | " |
| East HO, near signal 59 | BS | " |
| West HO, near signal 61 | BS | " |
| Westbound order block, east MQ crossing | MQ | " |
| Crossover east leg wye MQ crossing | MQ | " |
| 200 ft. east of Home signal at west end O & W Bridge | MQ | " |
| At westbound Home signal at east end of O & W Bridge | MQ | " |
| Four Story Cut | MQ | " |
| Eastbound automatic signal 68–2–E | MQ | " |
| Red Onion crossover, 5 miles west MQ crossing | MQ | " |
| One mile east GD, east end passing siding | MQ | " |
| One mile west GD, west end passing siding | FX | " |
| Crossover BD | FX | " |
| East and west end Otisville Tunnel | FX | " |
| Crossover east FX Tower | FX | " |

**New York Division, Connecting with Train Dispatchers' Circuit:**

West end Passaic Park Drawbridge, east side
Monroe St., Passaic, gate tower
Crossover Passaic (on freight house)
Crossover between Clifton and Lake View
West Paterson gate tower
Waldwick engine foreman's office
200 feet west of station platform, westbound side, Allendale
Ramsey, 500 feet east road crossing, westbound side
Crossover east of Tuxedo
At overhead highway crossing between Mahwah and Ramsey
Southfield, at crossover
East side Carpenters switch, west of Monroe
Monroe, at crossover
Oxford (outside of station)
Greycourt, east of station
East end Greycourt Yard
New Hampton on station
Outside gate tower, James Street, Middletown
Crossover at Middletown Summit
West end of siding Middletown Summit
Creamery switch east of Otisville

## INSTRUCTIONS FOR ENGINEMEN WITH LOCOMOTIVES EQUIPPED WITH AUTOMATIC TRAIN STOP DEVICES

### Automatic Train Control

Open inductors are in service on engine dispatching tracks at Jersey City, Secaucus, Port Jervis; and also on Inbound and Outbound Turntable Tracks at Maybrook (For diesels only) enginemen are required to take brake application passing over the first of these inductors and to acknowledge passing over the other.

All defects in apparatus must be reported on regular Form 1404. It is required that when an engine equipped with automatic train stop makes any stop on account of same, regardless of whether it occurs on the New York or Delaware Division, it should be reported to the Superintendent at once and engineers must, at the completion of their trip, submit Form 5322-A to the Master Mechanic. Great care in making this report should be taken in giving the exact location of the brake application. This report in addition to Form 5322 made out by the engineer. This does not cancel the instructions relative to engineers reporting cut out of automatic train stop upon arrival at terminal.

Engines not equipped with Automatic Train Control, or with such device not in working order, will not be handled over train stop territory except under following restrictions:

1. Double-headed behind an engine the train stop device of which is in working order.
2. Dead, in freight train.
3. When train stop device fails between terminals seal will be broken on cutout cock, train stop device cut out, and report will be made to Superintendent at first point of communication and train will proceed in accordance with instructions received. In the event prevailing weather conditions interfere with visibility of signals, trains will proceed under caution from point where device fails to point of communication with Superintendent.
4. Crews of engines of foreign lines handling detoured trains between points intermediate to division terminals, under protection of Erie pilot, will be governed by instructions of Superintendent as to extra precautions to be taken to safeguard movement.

### To Place Equipment in Operation

*Steam:*

1. Headlight generator must be running.
2. Main reservoir must be pumped up.
3. Reset button must be depressed for two seconds.
4. Brake valve must be moved to full service position to latch up handle to rotary valve.

*Diesel:*

1. Have Diesel engines running with throttle in idle position.
2. See that cutout cock in EP valve pipe is in "IN" position and sealed.
3. Close switch that starts A.T.S. motor generator set.
4. Operate acknowledging lever to full acknowledging position and hold for two seconds. Governor check light will light when A.T.S. is reset.
5. Place brake valve handle in lap position until application pressure (AP) is equal to main reservoir pressure or nearly so, then brakes can be released in the usual manner and power control (PC) switch must be reset manually on Electro-Motive locomotives.

### Operation

*Steam:* The actuator moves the rotary in the brake valve to service position only when A.T.S. application occurs, but the brake valve handle does not move. The engineman can manually go from service position to emergency position. When an A.T.S. application has been received, the train will come to a stop and it will be necessary, for the engineman to press the reset button located on the right side of the tender frame for two seconds; this will reset the system and indicator on top of the actuator will again go to the reset position, arrow pointing to "R".

Brake valve handle can then be relatched with the rotary by moving the handle to service position; after relatching brake valve can be moved to any position desried.

*Diesel:* Brakes are applied with an application valve which causes no movement of the brake valve handle or rotary; engineman can obtain an emergency application in the usual way after receiving an A.T.S. application but brakes cannot be released until train comes to a stop.

To release brakes, it is necessary to pull acknowledger handle all the way over for about two seconds; the check light will then light and brake valve must be moved to lap position until Application Pressure (AP) builds up, then brakes can be released in the usual way and PC switch must be reset manually on Electro-Motive locomotives.



### Broken Air Pipes

*Steam:* If pipe on actuator cylinder is broken or leaking, plug it. It will then be necessary to break seal and raise cutout cock handle to cutout position.

When air pipe to whistle valve breaks, same should be plugged and automatic train stop not cut out.

### Acknowledging Contactor

When required to acknowledge, acknowledger handle must be pulled down before passing a signal displaying other than "Proceed." If held down more than fifteen seconds, an automatic application will result.

Acknowledger handle must be released when whistle stops blowing or inductor has been passed.

Failure of acknowledging whistle to blow while acknowledging should be reported on form 5322-A.

Enginemen must not acknowledge until after signal indication has been observed and is being obeyed.

### Control Cutout Cock

This is to be used only in case of a failure of automatic train stop apparatus on locomotive.

*Steam:* This is under left hand actuator cylinder and when handle is in horizontal position the apparatus is cut in and when raised to the vertical position it is cut out.

*Diesel:* This is in the "EP" valve pipe in the nose of the locomotive and seal must be broken and handle turned to "out" position to cut the apparatus out.

### Over Speed Governor

*Diesel:* Speed warning whistle will sound at approximately 86 m.p.h. on passenger locomotives and approximately 62 m.p.h. on freight locomotives and will continue to sound until speed is reduced below that value.

An over-speed brake application will occur at approximately 89 m.p.h. on passenger and approximately 65 m.p.h. on freight locomotives and can be released by placing the throttle in idle position, the brake handle in lap until the application valve in the brake system is reset.

Operation of acknowledger handle is not required after an overspeed brake application but "PC" switch must be reset manually on Electro-Motive locomotives before throttle is opened.

### Light Defect

*Steam:* When automatic train stop is in service, and a short occurs on the light circuit, it causes a drop in voltage until fuse on light circuit is blown, which, as a rule, will cause an application of the brakes. If such occurs, engineman will push reset button, which will develop the condition of generator and automatic stop circuit, and if both prove to be in working condition, engineman will proceed without cutting out automatic train control.

### Governor Check Light

*Diesel:* This light is provided to indicate that automatic train stop is reset and only burns while locomotive is standing and goes out soon after locomotive starts to move.

### Defects or Failure of Apparatus

These shall be reported on regular engineer's defect form 5322-A immediately upon arrival at terminal. Improper applications at clear signals or other points should be reported at first telegraph office.

### Safety Control (Dead Man)

*Diesel:* Each engineman's station in the operating cab of Diesel road locomotives is equipped with a foot pedal operated safety control. This feature is connected in with application portion of brake valve.

When brakes are applied, either automatic or straight air, so that brake cylinder pressure is in excess of 35 lbs., the safety control feature is suppressed and then only can foot be removed from foot pedal.

In normal operation, the foot pedal must be depressed at all times the engine is in service. Should engineman's foot slip off or should he be incapacitated and unable to depress the foot pedal, a warning whistle immediately sounds for approximately 4½ seconds and if the foot pedal is not again depressed within this time, the application portion of the brake valve operates and an automatic brake application is effected.

At the start of an Automatic Train Stop, Over Speed Governor, Safety Control or Emergency Brake Application, the power control (PC) switch opens which in turn moves all Diesel engine governors to idle position, shuts off fuel pumps and removes all power from the traction motors and power cannot again be applied after a Safety Control application until foot pedal has been depressed and Automatic Brake Valve handle moved to lap position and application pressure nearly equals main reservoir pressure, then "PC" switch must be reset manually on Electro-Motive locomotives, then brakes can be released in the usual manner.

It is absolutely forbidden to nullify the operation of this Safety Control Equipment in any way except when it becomes defective enroute then it should be cut out at the regular cutout cock and reported at the next terminal.

## Port Jervis to Jersey City

### EASTWARD — FIRST CLASS — TRAINS (Read Up)

| Distance from Sparrowbush | Distance between Stations | No. 36 STATIONS | 100 Daily Except Sunday and Holiday | 10 Daily | 250 Holiday Only | 150 Daily Except Sunday and Holiday |
|---|---|---|---|---|---|---|
| | | | A.M. | A.M. | A.M. | A.M. |
| | | NEW YORK | | | N.B. | N.B. |
| .. | .. | Chambers St. (Ferry) A. | 5.54 | 5.54 | 6.24 | 6.39 |
| 89.8 | 2.2 | JERSEY CITY ..... A. N | 5.42 | 5.30 | 6.10 | 6.25 |
| 87.6 | 6.3 | CROXTON ..... N | 5.37 | 5.25 | 6.05 | 6.20 |
| 81.3 | 0.5 | RUTHERFORD | s 5.28 | | s 5.55 | s 6.10 |
| 80.8 | 0.7 | RUTHERFORD JCT. N | 5.26 | 5.16 | 5.53 | 6.08 |
| 80.1 | 0.6 | CARLTON HILL | s 5.24 | | s 5.51 | s 6.06 |
| 79.5 | 0.7 | PASSAIC PARK | s 5.22 | | s 5.49 | s 6.04 |
| 78.8 | 0.5 | PROSPECT ST. | | | | s 6.02 |
| 78.3 | 0.4 | PASSAIC | s 5.19 | (B.C.R.R.) | s 5.46 | s 6.00 |
| 77.9 | 0.5 | HARRISON ST. | | | | s 5.58 |
| 77.4 | 1.4 | CLIFTON | s 5.16 | | s 5.43 | s 5.56 |
| 76.0 | 1.2 | LAKE VIEW | s 5.13 | | s 5.40 | s 5.53 |
| 74.8 | 0.7 | XW TOWER ..... N | 5.10 | | 5.37 | 5.50 |
| 74.1 | 1.0 | PATERSON | s 5.08 | | s 5.35 | s 5.48 |
| 73.1 | 1.0 | RIVER ST. | s 5.05 | | s 5.32 | s 5.45 |
| 72.1 | 1.8 | HAWTHORNE | s 5.02 | | s 5.30 | s 5.42 |
| 70.3 | 0.8 | GLEN ROCK | s 4.59 | | s 5.27 | s 5.39 |
| 69.5 | 0.7 | RIDGEWOOD JCT. ..... N | 4.57 | 5.04 | 5.25 | 5.37 |
| 68.8 | 1.2 | RIDGEWOOD | s 4.56 | | s 5.24 | s 5.36 |
| 67.6 | 1.1 | HOHOKUS | s 4.53 | | s 5.21 | s 5.33 |
| 66.5 | 1.4 | WALDWICK ..... N | s 4.50 | 5.00 | s 5.18 | s 5.30 |
| 65.1 | 1.9 | ALLENDALE | | | s 5.15 | s 5.27 |
| 63.2 | 2.6 | RAMSEY | | | s 5.12 | s 5.24 |
| 60.6 | 1.4 | MAHWAH | | | s 5.06 | s 5.18 |
| 59.2 | 1.0 | SUFFERN ..... N | | 4.52 | s 5.04 | s 5.15 |
| 58.2 | 1.2 | HILLBURN | | | | |
| 57.0 | 1.8 | RAMAPO | | | | |
| 55.2 | 2.6 | SLOATSBURG | | | | |
| 52.6 | 3.8 | TUXEDO | | 4.43 | | |
| 48.8 | 2.4 | SOUTHFIELDS | | | | |
| 46.4 | 1.6 | ARDEN | | | | |
| 44.8 | 1.0 | NEWBURGH JCT. ..... N | | 4.33 | | |
| 43.8 | 2.5 | HARRIMAN | | | | |
| 41.3 | 2.8 | MONROE | | | | |
| 38.5 | 2.2 | OXFORD | | | | |
| 36.3 | 0.8 | GREYCOURT ..... D | | 4.20 | | |
| 35.5 | 4.5 | CHESTER | | | | |
| 31.0 | 3.9 | GOSHEN ..... N | | 4.13 | | |
| 27.1 | 3.4 | NEW HAMPTON | | | | |
| 23.7 | 2.7 | MIDDLETOWN ..... N | | s 4.02 | | |
| 21.0 | 1.2 | HOWELLS JCT. | | | | |
| 19.8 | 4.7 | HOWELLS | | | | |
| 15.1 | 5.0 | OTISVILLE | | | | |
| 10.1 | 7.6 | GRAHAM ..... N | | 3.35 | | |
| 2.5 | 2.5 | PORT JERVIS ..... L. N | | 3.20 | | |
| | | A. | | 3.15 | | |
| .. | .. | SPARROWBUSH ..... N | | 3.10 | | |
| | | | A.M. | A.M. | A.M. | A.M. |



## Port Jervis to Jersey City

### EASTWARD — FIRST CLASS — TRAINS (Read Up)

| 300 Daily Except Saturday Sunday & Holiday | | 152 Daily Except Holiday | 104 Daily Except Sunday | 154 Daily Except Sunday and Holiday | 302 Daily Except Sunday & Holiday | 108 Daily | 6 Daily | 50 Daily Except Saturday Sunday & Holiday |
|---|---|---|---|---|---|---|---|---|
| A.M. | | A.M. | A.M. | A.M. | A.M. | A.M. | A.M. | A.M. |
| N.B. | | N.B. | N.B. | N.B. | N.B. | N.B. | | N.B. |
| 6.39 | | 7.06 | 7.27 | 7.34 | 7.44 | 8.04 | 8.04 | 8.11 |
| 6.27 | | 6.50 | 7.12 | 7.22 | 7.25 | 7.49 | 7.50 | 7.58 |
| 6.22 | | 6.45 | 7.07 | 7.17 | 7.20 | 7.44 | 7.45 | 7.53 |
| (Newark Branch.) | | s 6.35 | s 6.56 | s 7.07 | (Newark Branch.) | s 7.33 | | |
| | | 6.33 | 6.54 | 7.05 | | 7.30 | 7.35 | 7.43 |
| | | s 6.31 | s 6.52 | | | s 7.28 | | |
| | | s 6.29 | s 6.50 | | | s 7.26 | | |
| | | s 6.27 | s 6.48 | | | s 7.24 | | |
| | | s 6.25 | s 6.46 | (B.C.R.R.) | | s 7.22 | | (B.C.R.R.) |
| | | s 6.23 | s 6.44 | | | | | |
| | | s 6.21 | s 6.42 | | | s 7.19 | | |
| | | s 6.18 | s 6.38 | | | s 7.16 | | |
| 5.52 | | 6.15 | 6.35 | | 6.42 | 7.13 | 7.24 | |
| s 5.50 | | s 6.13 | s 6.33 | | s 6.39 | s 7.10 | s 7.22 | |
| | | s 6.11 | s 6.31 | | | s 7.07 | | |
| | | s 6.08 | s 6.28 | | | s 7.04 | | |
| | | s 6.05 | s 6.25 | | | s 7.01 | | |
| | | 6.03 | 6.23 | 6.45 | | 6.59 | 7.14 | 7.27 |
| | | s 6.02 | s 6.21 | s 6.44 | | s 6.58 | s 7.12 | s 7.26 |
| | | | s 6.18 | s 6.41 | | s 6.55 | Track 4 | s 7.23 |
| | | s 5.58 | s 6.15 | s 6.38 | | s 6.52 | 7.08 | s 7.20 |
| | | s 5.55 | | s 6.35 | | s 6.48 | | s 7.17 |
| | | s 5.52 | | s 6.32 | | s 6.45 | | s 7.13 |
| | | s 5.46 | | s 6.26 | | | | s 7.07 |
| | | s 5.43 | | s 6.23 | | | 7.00 | s 7.04 |
| | | | | | | | | s 6.52 |
| | | | | | | | | s 6.48 |
| | | | | | | | 6.53 | s 6.44 |
| | | | | | | | | s 6.38 |
| | | | | | | | | f 6.34 |
| | | | | | | | 6.45 | 6.32 |
| | | | | | | | | s 6.30 |
| | | | | | | | | s 6.26 |
| | | | | | | | 6.34 | |
| | | | | | | | 6.27 | |
| | | Will not operate west of Waldwick Sundays. | | | | Will not operate west of Waldwick Sundays and Holidays. | * 6.19 | No. 6 stop Middletown to discharge passengers Hornell, west. |
| | | | | | Will operate Feb. 12. | | | |
| | | | | | | | 6.02 | |
| | | | | | | | 5.50 | |
| | | | | | | | 5.40 | |
| | | | | | | | 5.35 | |
| A.M. | | A.M. | A.M. | A.M. | A.M. | A.M. | A.M. | A.M. |

## Port Jervis to Jersey City

### EASTWARD — FIRST CLASS — TRAINS (Read Up)

| Distance from Sparrowbush | Distance between Stations | No. 36 STATIONS | | 304 | 110 | 230 | 112 |
|---|---|---|---|---|---|---|---|
| | | | | Daily Except Saturday Sunday & Holiday | Daily Except Saturday Sunday & Holiday | Saturday Only Except Holiday | Daily Except Saturday Sunday & Holiday |
| | | | | A.M. | A.M. | A.M. | A.M. |
| | | NEW YORK | | N.B. | N.B. | N.B. | N.B. |
| .. | .. | Chambers St. (Ferry) ..A. | | 8.17 | 8.17 | 8.26 | 8.26 |
| 89.8 | 2.2 | JERSEY CITY.....A. N | | 8.03 | 8.04 | 8.10 | 8.10 |
| 87.6 | 6.3 | CROXTON.....N | | 7.58 | 7.59 | 8.05 | 8.05 |
| 81.3 | 0.5 | RUTHERFORD | | (Newark Branch.) | s 7.49 | s 7.55 | s 7.56 |
| 80.8 | 0.7 | RUTHERFORD JCT. N | | | 7.47 | 7.53 | 7.54 |
| 80.1 | 0.6 | CARLTON HILL | | | s 7.45 | s 7.51 | |
| 79.5 | 0.7 | PASSAIC PARK | | | s 7.43 | s 7.49 | |
| 78.8 | 0.5 | PROSPECT ST. | | | s 7.41 | s 7.47 | |
| 78.3 | 0.4 | PASSAIC | | | s 7.39 | s 7.45 | (B.C.R.R.) |
| 77.9 | 0.5 | HARRISON ST. | | | | s 7.43 | |
| 77.4 | 1.4 | CLIFTON | | | s 7.36 | s 7.41 | |
| 76.0 | 1.2 | LAKE VIEW | | | s 7.33 | s 7.38 | |
| 74.8 | 0.7 | XW TOWER.....N | | 7.18 | 7.30 | 7.35 | |
| 74.1 | 1.0 | PATERSON | | s 7.16 | s 7.27 | s 7.32 | |
| 73.1 | 1.0 | RIVER ST. | | | s 7.24 | s 7.29 | |
| 72.1 | 1.8 | HAWTHORNE | | | s 7.21 | s 7.26 | |
| 70.3 | 0.8 | GLEN ROCK | | | s 7.18 | s 7.23 | |
| 69.5 | 0.7 | RIDGEWOOD JCT.....N | | | 7.16 | 7.21 | 7.32 |
| 68.8 | 1.2 | RIDGEWOOD | | | s 7.15 | s 7.20 | s 7.31 |
| 67.6 | 1.1 | HOHOKUS | | | s 7.12 | s 7.17 | s 7.28 |
| 66.5 | 1.4 | WALDWICK .....N | | | s 7.09 | s 7.14 | s 7.25 |
| 65.1 | 1.9 | ALLENDALE | | | | | |
| 63.2 | 2.6 | RAMSEY | | | | | |
| 60.6 | 1.4 | MAHWAH | | | | | |
| 59.2 | 1.0 | SUFFERN.....N | | | | | |
| 58.2 | 1.2 | HILLBURN | | | | | |
| 57.0 | 1.8 | RAMAPO | | | | | |
| 55.2 | 2.6 | SLOATSBURG | | | | | |
| 52.6 | 3.8 | TUXEDO | | | | | |
| 48.8 | 2.4 | SOUTHFIELDS | | | | | |
| 46.4 | 1.6 | ARDEN | | | | | |
| 44.8 | 1.0 | NEWBURGH JCT.....N | | | | | |
| 43.8 | 2.5 | HARRIMAN | | | | | |
| 41.3 | 2.8 | MONROE | | | | | |
| 38.5 | 2.2 | OXFORD | | | | | |
| 36.3 | 0.8 | GREYCOURT.....D | | | | | |
| 35.5 | 4.5 | CHESTER | | | | | |
| 31.0 | 3.9 | GOSHEN.....N | | | Will operate Oct. 12, Nov. 2, Feb. 12 and Feb. 22. | | |
| 27.1 | 3.4 | NEW HAMPTON | | | | | |
| 23.7 | 2.7 | MIDDLETOWN.....N | | | | | |
| 21.0 | 1.2 | HOWELLS JCT. | | | | | |
| 19.8 | 4.7 | HOWELLS | | Will operate Oct. 12, Nov. 2 | | | |
| 15.1 | 5.0 | OTISVILLE | | | | | |
| 10.1 | 7.6 | GRAHAM.....N | | | | | |
| 2.5 | 2.5 | PORT JERVIS.....L. N A. | | | | | |
| .. | .. | SPARROWBUSH.....N | | | | | |
| | | | | A.M. | A.M. | A.M. | A.M. |



## Port Jervis to Jersey City

### EASTWARD — FIRST CLASS — TRAINS (Read Up)

| 114 | 156 | 730 | 306 | 120 | 52 | | | 204 |
|---|---|---|---|---|---|---|---|---|
| Daily Except Saturday Sunday & Holiday | Daily Except Sunday and Holiday | Sunday and Holiday Only | Daily Except Sunday and Holiday | Daily Except Saturday Sunday & Holiday | Daily Except Saturday Sunday & Holiday | | | Saturday and Holiday Only |
| A.M. | A.M. | A.M. | A.M. | A.M. | A.M. | | | A.M. |
| N.B. | N.B. | N.B. | N.B. | N.B. | N.B. | | | N.B. |
| 8.26 | 8.26 | 8.43 | 8.43 | 8.32 | 8.37 | | | 8.43 |
| 8.14 | 8.14 | 8.25 | 8.30 | 8.20 | 8.22 | | | 8.28 |
| 8.09 | 8.09 | 8.20 | 8.25 | 8.15 | 8.17 | | | 8.23 |
| s 8.01 | | s 8.10 | (Newark Branch.) | | | | | |
| 7.59 | 8.00 | 8.08 | | 8.05 | 8.08 | | | 8.13 |
| s 7.57 | | s 8.06 | | | | | | |
| s 7.55 | | s 8.04 | | | | | | |
| s 7.52 | | | | | | | | |
| s 7.50 | (B.C.R.R.) | s 8.01 | | (B.C.R.R.) | (B.C.R.R.) | | | (B.C.R.R.) |
| s 7.48 | | | | | | | | |
| s 7.46 | | s 7.58 | | | | | | |
| s 7.43 | | s 7.55 | | | | | | |
| 7.40 | | 7.52 | 7.48 | | | | | |
| s 7.38 | | s 7.50 | s 7.46 | | | | | |
| | | s 7.47 | | | | | | |
| | | s 7.44 | s 7.41 | | | | | |
| | | s 7.41 | s 7.38 | | | | | |
| | 7.42 | 7.39 | 7.35 | 7.53 | 7.56 | | | 7.59 |
| | * | s 7.38 | Track 4 s7.34 | s 7.51 | | | | s 7.58 |
| | s 7.38 | s 7.35 | | | s 7.51 | | | s 7.55 |
| | s 7.35 | s 7.32 | 7.30 | s 7.43 | 7.48 | | | 7.53 |
| | s 7.32 | s 7.29 | | | | | | s 7.48 |
| | s 7.29 | s 7.26 | | | | | | s 7.45 |
| | s 7.23 | s 7.19 | | | s 7.38 | | | s 7.38 |
| | s 7.20 | s 7.17 | | | s 7.35 | | | s 7.35 |
| | | | | | s 7.32 | | | s 7.32 |
| | | | | | s 7.27 | | | s 7.27 |
| | | | | | s 7.22 | | | s 7.22 |
| | | | | | s 7.16 | | | s 7.16 |
| | | | | | | | | f 7.12 |
| | | | | | 7.10 | | | 7.10 |
| | | | | | s 7.08 | | | s 7.08 |
| | | | | | s 7.00 | | | s 7.00 |
| | | | | | s 6.52 | | | f 6.52 |
| | | | | | s 6.48 | | | s 6.48 |
| | | | | | s 6.41 | | | s 6.41 |
| | | | | | s 6.34 | | | s 6.34 |
| | | Will operate west of Waldwick Holidays. | | | s 6.29 | | | s 6.29 |
| Will operate Nov. 2. | Saturday stop Ridgewood 7.41 A.M. | | | | s 5.33 | | | s 5.33 |
| | | | | | 5.27 | | | 5.27 |
| | | | | | 5.15 | | | 5.15 |
| A.M. | A.M. | A.M. | A.M. | A.M. | A.M. | | | A.M. |

## Port Jervis to Jersey City

### EASTWARD — FIRST CLASS — TRAINS (Read Up)

| Distance from Sparrowbush | Distance between Stations | No. 36 STATIONS | 160 | 118 | 158 | 308 | |
|---|---|---|---|---|---|---|---|
| | | | Daily Except Saturday Sunday & Holiday | Daily Except Saturday Sunday & Holiday | Daily Except Sunday and Holiday | Daily Except Sunday and Holiday | |
| | | | A.M. | A.M. | A.M. | A.M. | |
| | | NEW YORK | N.B. | N.B. | | | |
| .. | .. | Chambers St. (Ferry) A. | 8.43 | 8.43 | 8.57 | 9.14 | |
| 89.8 | 2.2 | JERSEY CITY ..... A. N | 8.28 | 8.31 | 8.45 | 9.02 | |
| 87.6 | 6.3 | CROXTON ..... N | 8.23 | 8.26 | 8.40 | 8.57 | |
| 81.3 | 0.5 | RUTHERFORD | | s 8.18 | s 8.31 | (Newark Branch.) | |
| 80.8 | 0.7 | RUTHERFORD JCT. N | 8.13 | 8.15 | 8.29 | | |
| 80.1 | 0.6 | CARLTON HILL | | | s 8.27 | | |
| 79.5 | 0.7 | PASSAIC PARK | | | s 8.25 | | |
| 78.8 | 0.5 | PROSPECT ST. | | | s 8.23 | | |
| 78.3 | 0.4 | PASSAIC | (B.C.R.R.) | s 8.10 | s 8.21 | | |
| 77.9 | 0.5 | HARRISON ST. | | | s 8.18 | | |
| 77.4 | 1.4 | CLIFTON | | s 8.07 | s 8.16 | | |
| 76.0 | 1.2 | LAKE VIEW | | s 8.04 | s 8.13 | | |
| 74.8 | 0.7 | XW TOWER ..... N | | 8.02 | 8.10 | 8.16 | |
| 74.1 | 1.0 | PATERSON | | s 8.00 | s 8.08 | s 8.14 | |
| 73.1 | 1.0 | RIVER ST. | | | s 8.05 | | |
| 72.1 | 1.8 | HAWTHORNE | | | s 8.02 | | |
| 70.3 | 0.8 | GLEN ROCK | | | s 7.59 | | |
| 69.5 | 0.7 | RIDGEWOOD JCT. ..... N | 8.00 | | 7.57 | | |
| 68.8 | 1.2 | RIDGEWOOD | Track 4 | | s 7.56 | | |
| 67.6 | 1.1 | HOHOKUS | | | s 7.53 | | |
| 66.5 | 1.4 | WALDWICK ..... N | 7.55 | | s 7.50 | | |
| 65.1 | 1.9 | ALLENDALE | s 7.52 | | | | |
| 63.2 | 2.6 | RAMSEY | s 7.49 | | | | |
| 60.6 | 1.4 | MAHWAH | s 7.43 | | | | |
| 59.2 | 1.0 | SUFFERN ..... N | s 7.40 | | | | |
| 58.2 | 1.2 | HILLBURN | | | | | |
| 57.0 | 1.8 | RAMAPO | | | | | |
| 55.2 | 2.6 | SLOATSBURG | | | | | |
| 52.6 | 3.8 | TUXEDO | | | | | |
| 48.8 | 2.4 | SOUTHFIELDS | | | | | |
| 46.4 | 1.6 | ARDEN | | | | | |
| 44.8 | 1.0 | NEWBURGH JCT. ..... N | | | | | |
| 43.8 | 2.5 | HARRIMAN | | | | | |
| 41.3 | 2.8 | MONROE | | | | | |
| 38.5 | 2.2 | OXFORD | | | | | |
| 36.3 | 0.8 | GREYCOURT ..... D | | | | | |
| 35.5 | 4.5 | CHESTER | | | | | |
| 31.0 | 3.9 | GOSHEN ..... N | | | | Will operate Oct. 12, Nov. 2, Feb. 12 | |
| 27.1 | 3.4 | NEW HAMPTON | | | | | |
| 23.7 | 2.7 | MIDDLETOWN ..... N | | | | | |
| 21.0 | 1.2 | HOWELLS JCT. | | | | | |
| 19.8 | 4.7 | HOWELLS | | | | | |
| 15.1 | 5.0 | OTISVILLE | | | | | |
| 10.1 | 7.6 | GRAHAM ..... N | | | | | |
| 2.5 | 2.5 | PORT JERVIS ..... L. N / A. | | | | | |
| .. | .. | SPARROWBUSH ..... N | | | | | |
| | | | A.M. | A.M. | A.M. | A.M. | |



## Port Jervis to Jersey City

### EASTWARD — FIRST CLASS — TRAINS (Read Up)

| 184 | 122 | 700 | 232 | 124 | 56 | 162 | 58 | |
|---|---|---|---|---|---|---|---|---|
| Daily Except Sunday and Holiday | Daily Except Saturday Sunday & Holiday | Sunday Only | Saturday Only | Daily Except Saturday | Daily Except Sunday and Holiday | Daily Except Sunday | Sunday and Holiday Only | |
| A.M. | A.M. | A.M. | A.M. | A.M. | A.M. | A.M. | A.M. | |
| N.B. | N.B. | N.B. | | N.B. | | N.B. | | |
| 9.03 | 9.14 | 9.19 | 9.27 | 9.44 | 9.27 | 10.24 | 10.44 | |
| 8.50 | 8.57 | 9.00 | 9.15 | 9.26 | 9.14 | 10.05 | 10.30 | |
| 8.45 | 8.52 | 8.55 | 9.10 | 9.21 | 9.09 | 10.00 | 10.25 | |
| | s 8.42 | | s 9.00 | s 9.11 | | s 9.50 | s10.16 | |
| 8.36 | 8.40 | 8.46 | 8.59 | 9.09 | 9.00 | 9.48 | 10.14 | |
| | | | s 8.57 | s 9.07 | | | | |
| | s 8.37 | | s 8.55 | s 9.05 | | s 9.46 | s10.11 | |
| (B.C.R.R.) | s 8.34 | (B.C.R.R.) | s 8.52 | s 9.02 | (B.C.R.R.) | s 9.43 | s10.08 | |
| | s 8.31 | | s 8.49 | s 8.59 | | s 9.40 | s10.05 | |
| | 8.28 | | s 8.46 | s 8.56 | | s 9.37 | s10.02 | |
| | | | 8.43 | 8.53 | | 9.34 | 9.59 | |
| | s 8.26 | | s 8.41 | s 8.51 | | s 9.32 | s 9.57 | |
| | | | s 8.39 | s 8.49 | | s 9.29 | | |
| | | | s 8.36 | s 8.46 | | s 9.27 | s 9.52 | |
| | s 8.21 | | s 8.33 | s 8.43 | | s 9.24 | s 9.49 | |
| 8.16 | 8.19 | 8.30 | 8.31 | 8.41 | 8.48 | 9.22 | 9.47 | |
| s 8.14 | s 8.18 | s 8.28 | s 8.30 | s 8.40 | s 8.47 | s 9.21 | s 9.46 | |
| s 8.11 | | | s 8.27 | s 8.37 | | s 9.18 | s 9.43 | |
| s 8.08 | 8.15 | | s 8.24 | s 8.34 | 8.43 | s 9.15 | s 9.41 | |
| s 8.05 | | s 8.21 | | | | s 9.12 | s 9.38 | |
| s 8.02 | | s 8.18 | | | s 8.39 | s 9.09 | s 9.35 | |
| s 7.55 | | | | | s 8.34 | s 9.03 | s 9.29 | |
| s 7.53 | | s 8.11 | | | s 8.31 | s 9.01 | s 9.27 | |
| | | | | | | | | |
| | | | | | | | | |
| | | | | | s 8.25 | | s 9.21 | |
| | | 8.02 | | | s 8.20 | | s 9.16 | |
| | | | | | s 8.14 | | | |
| | | | | | s 8.10 | | | |
| | | 7.53 | | | 8.07 | | 9.07 | |
| | | s 7.51 | | | s 8.05 | | s 9.05 | |
| | | s 7.46 | | | s 8.00 | | s 8.58 | |
| | | | | | | | | |
| | | | | | | | | |
| | | s 7.37 | | | s 7.51 | | s 8.49 | |
| Will operate Oct. 12, Nov. 2, Feb. 12 | | s 7.30 | | | s 7.44 | | s 8.42 | |
| | | | | | s 7.38 | | s 8.36 | |
| | | s 7.20 | | | s 7.33 | | s 8.31 | |
| | | | | | | | | |
| | | | | | | | | |
| | | | | | s 7.26 | | s 8.22 | |
| | | | | | s 7.20 | | s 8.16 | |
| | | 6.53 | | | 7.13 | | 8.09 | |
| | | 6.40 | | | 7.00 | | 7.57 | |
| | | | | | | | | |
| | | | | | | | | |
| A.M. | A.M. | A.M. | A.M. | A.M. | A.M. | A.M. | A.M. | |

## Port Jervis to Jersey City

### EASTWARD — FIRST CLASS — TRAINS (Read Up)

| Distance from Sparrowbush | Distance between Stations | No. 36 STATIONS | 126 Daily Except Saturday and Holiday | 252 Saturday Only Except Holiday | 164 Daily Except Saturday and Sunday | 128 Daily | 130 Daily Except Saturday and Sunday |
|---|---|---|---|---|---|---|---|
| | | | A.M. | A.M. | A.M. | P.M. | P.M. |
| | | NEW YORK | N.B. | | | N.B. | |
| .. | .. | Chambers St. (Ferry) A. | 11.14 | 11.24 | 11.34 | 12.14 | 12.34 |
| 89.8 | 2.2 | JERSEY CITY ..... A. N | 10.55 | 11.12 | 11.22 | 11.59 | 12.22 |
| 87.6 | 6.3 | CROXTON ..... N | 10.50 | 11.07 | 11.17 | 11.54 | 12.17 |
| 81.3 | 0.5 | RUTHERFORD | s10.41 | s10.57 | s11.07 | s11.44 | s12.08 |
| 80.8 | 0.7 | RUTHERFORD JCT. N | 10.39 | 10.55 | 11.05 | 11.42 | 12.06 |
| 80.1 | 0.6 | CARLTON HILL | | s10.53 | s11.03 | | |
| 79.5 | 0.7 | PASSAIC PARK | s10.36 | s10.51 | s11.01 | s11.39 | s12.04 |
| 78.8 | 0.5 | PROSPECT ST. | | | | | |
| 78.3 | 0.4 | PASSAIC | s10.33 | s10.48 | s10.58 | s11.36 | s12.01 |
| 77.9 | 0.5 | HARRISON ST. | | | | | |
| 77.4 | 1.4 | CLIFTON | s10.30 | s10.45 | s10.55 | s11.32 | s11.58 |
| 76.0 | 1.2 | LAKE VIEW | s10.27 | s10.42 | s10.52 | * | s11.55 |
| 74.8 | 0.7 | XW TOWER ..... N | 10.22 | 10.39 | 10.49 | 11.29 | 11.52 |
| 74.1 | 1.0 | PATERSON | s10.20 | s10.37 | s10.47 | s11.27 | s11.50 |
| 73.1 | 1.0 | RIVER ST. | | s10.35 | s10.45 | * | |
| 72.1 | 1.8 | HAWTHORNE | | s10.33 | s10.43 | s11.21 | |
| 70.3 | 0.8 | GLEN ROCK | | s10.30 | s10.40 | s11.18 | |
| 69.5 | 0.7 | RIDGEWOOD JCT. ..... N | | 10.28 | 10.38 | 11.16 | |
| 68.8 | 1.2 | RIDGEWOOD | | s10.26 | s10.36 | s11.14 | |
| 67.6 | 1.1 | HOHOKUS | | s10.23 | s10.33 | s11.10 | |
| 66.5 | 1.4 | WALDWICK ..... N | | s10.20 | s10.30 | s11.07 | |
| 65.1 | 1.9 | ALLENDALE | | s10.17 | s10.27 | s11.04 | |
| 63.2 | 2.6 | RAMSEY | | s10.14 | s10.24 | s11.01 | |
| 60.6 | 1.4 | MAHWAH | | s10.08 | s10.18 | s10.55 | |
| 59.2 | 1.0 | SUFFERN ..... N | | s10.05 | s10.15 | s10.52 | |
| 58.2 | 1.2 | HILLBURN | | | | | |
| 57.0 | 1.8 | RAMAPO | | | | | |
| 55.2 | 2.6 | SLOATSBURG | | | | | |
| 52.6 | 3.8 | TUXEDO | | | | | |
| 48.8 | 2.4 | SOUTHFIELDS | | | | | |
| 46.4 | 1.6 | ARDEN | | | | | |
| 44.8 | 1.0 | NEWBURGH JCT. ..... N | | | | | |
| 43.8 | 2.5 | HARRIMAN | | | | | |
| 41.3 | 2.8 | MONROE | | | | | |
| 38.5 | 2.2 | OXFORD | | | | | |
| 36.3 | 0.8 | GREYCOURT ..... D | | | | | |
| 35.5 | 4.5 | CHESTER | | | | | |
| 31.0 | 3.9 | GOSHEN ..... N | | | | Will operate west of Waldwick Sunday. Sundays stop River St. and Lake View. | |
| 27.1 | 3.4 | NEW HAMPTON | | | | | |
| 23.7 | 2.7 | MIDDLETOWN ..... N | | | | | |
| 21.0 | 1.2 | HOWELLS JCT. | | | | | |
| 19.8 | 4.7 | HOWELLS | | | Will operate Dec. 25, Jan. 1, and Feb. 12. | | |
| 15.1 | 5.0 | OTISVILLE | | | | | |
| 10.1 | 7.6 | GRAHAM ..... N | | | | | |
| 2.5 | 2.5 | PORT JERVIS ..... L. N / A. | | | | | |
| .. | .. | SPARROWBUSH ..... N | | | | | |
| | | | A.M. | A.M. | A.M. | A.M. | A.M. |



## Port Jervis to Jersey City

### EASTWARD — FIRST CLASS — TRAINS (Read Up)

| 30 Daily | 132 Daily Except Sunday | 752 Sunday Only | 136 Daily Except Sunday | 138 Daily Except Saturday | 140 Daily | 166 Daily Except Sunday | 142 Daily Except Saturday and Holiday | |
|---|---|---|---|---|---|---|---|---|
| P.M. | P.M. | P.M. | P.M. | P.M. | P.M. | P.M. | P.M. | |
| | | N.B. | | | | | N.B. | |
| 1.04 | 1.34 | 2.09 | 2.44 | 3.09 | 3.44 | 4.24 | 4.54 | |
| 12.50 | 1.22 | 1.52 | 2.24 | 2.57 | 3.30 | 4.12 | 4.40 | |
| 12.45 | 1.17 | 1.47 | 2.19 | 2.52 | 3.25 | 4.07 | 4.35 | |
| s12.35 | s 1.08 | s 1.38 | s 2.08 | s 2.42 | s 3.13 | s 3.58 | s 4.26 | |
| 12.33 | 1.06 | 1.36 | 2.06 | 2.40 | 3.11 | 3.56 | 4.24 | |
| | f 1.04 | s 1.34 | | s 2.38 | | s 3.54 | * | |
| | s 1.02 | f 1.32 | s 2.02 | s 2.36 | | s 3.52 | | |
| s12.28 | s12.59 | s 1.30 | s 1.59 | s 2.33 | s 3.04 | s 3.50 | s 4.19 | |
| | s12.56 | s 1.28 | s 1.55 | s 2.30 | s 2.59 | s 3.47 | s 4.16 | |
| | s12.53 | s 1.25 | s 1.52 | s 2.27 | * | s 3.44 | s 4.13 | |
| 12.22 | 12.50 | 1.22 | 1.49 | 2.24 | 2.55 | 3.41 | 4.10 | |
| s12.20 | s12.48 | s 1.20 | s 1.47 | s 2.22 | s 2.53 | s 3.39 | s 4.08 | |
| | | | | s 2.19 | | s 3.36 | | |
| | s12.45 | s 1.16 | s 1.43 | s 2.16 | s 2.48 | s 3.34 | s 4.05 | |
| s12.14 | s12.42 | s 1.13 | s 1.40 | s 2.13 | | s 3.31 | | |
| 12.12 | 12.40 | 1.11 | 1.38 | 2.11 | 2.44 | 3.29 | 4.01 | |
| s12.10 | s12.39 | s 1.09 | s 1.36 | s 2.10 | s 2.42 | s 3.27 | s 4.00 | |
| | s12.36 | s 1.06 | s 1.33 | s 2.07 | s 2.37 | s 3.24 | | |
| 12.06 | s12.33 | s 1.03 | s 1.30 | s 2.04 | s 2.34 | s 3.21 | s 3.55 | |
| s12.03 | | s 1.00 | | | s 2.31 | s 3.18 | | |
| s12.00 | | s12.57 | | | s 2.27 | s 3.15 | | |
| | | s12.51 | | | | s 3.08 | | |
| s11.53 | | s12.48 | | | s 2.20 | s 3.06 | | |
| f11.47 | | | | | | | | |
| s11.44 | | | | | | | | |
| 11.34 | | | | | | | | |
| s11.32 | No. 30 Tuesdays stop New Hampton receive passengers. | | | | | | | |
| s11.27 | | | | | | | | |
| s11.17 | | | | | | | | |
| s11.09 | | | | | | | | |
| * | | | | | | | | |
| s10.58 | | | | | | | | |
| f10.47 | | | | Will operate west of Paterson Sunday. | Saturday and Sunday stop Lake View 2.57 p.m. | | Sunday, stop Carlton Hill 4.22 p.m. | |
| s10.40 | | | | | | | | |
| 10.33 | | | | | | | | |
| 10.20 | | | | | | | | |
| A.M. | P.M. | P.M. | P.M. | P.M. | P.M. | P.M. | P.M. | |

## Port Jervis to Jersey City

### EASTWARD — FIRST CLASS — TRAINS (Read Up)

| Distance from Sparrowbush | Distance between Stations | No. 36 STATIONS | | 62 Daily Except Sunday and Holiday | 168 Daily Except Saturday Sunday & Holiday | 254 Saturday Sunday and Holiday Only | 70 Sunday and Holiday Only |
|---|---|---|---|---|---|---|---|
| | | | | P.M. | P.M. | P.M. | P.M. |
| .. | .. | NEW YORK Chambers St. (Ferry) A. | | 5.33 | 6.24 | N.B. 6.24 | N.B. 6.39 |
| 89.8 | 2.2 | JERSEY CITY..... A. N | | 5.15 | 6.10 | 6.10 | 6.25 |
| 87.6 | 6.3 | CROXTON.....N | | 5.10 | 6.05 | 6.05 | 6.20 |
| 81.3 | 0.5 | RUTHERFORD..... | | s 5.00 | s 5.53 | s 5.54 | s 6.10 |
| 80.8 | 0.7 | RUTHERFORD JCT. N | | 4.58 | 5.51 | 5.52 | 6.08 |
| 80.1 | 0.6 | CARLTON HILL..... | | | s 5.49 | s 5.50 | |
| 79.5 | 0.7 | PASSAIC PARK..... | | | s 5.46 | s 5.48 | |
| 78.8 | 0.5 | PROSPECT ST..... | | | s 5.43 | | |
| 78.3 | 0.4 | PASSAIC..... | | s 4.52 | s 5.40 | s 5.44 | (B.C.R.R.) |
| 77.9 | 0.5 | HARRISON ST..... | | | | | |
| 77.4 | 1.4 | CLIFTON..... | | s 4.49 | s 5.35 | s 5.40 | |
| 76.0 | 1.2 | LAKE VIEW..... | | s 4.46 | s 5.31 | s 5.37 | |
| 74.8 | 0.7 | XW TOWER.....N | | 4.43 | 5.27 | 5.34 | |
| 74.1 | 1.0 | PATERSON..... | | s 4.41 | s 5.25 | s 5.32 | |
| 73.1 | 1.0 | RIVER ST..... | | | s 5.22 | s 5.29 | |
| 72.1 | 1.8 | HAWTHORNE..... | | | s 5.19 | s 5.26 | |
| 70.3 | 0.8 | GLEN ROCK..... | | | s 5.15 | s 5.23 | |
| 69.5 | 0.7 | RIDGEWOOD JCT.....N | | 4.33 | 5.13 | 5.21 | 5.52 |
| 68.8 | 1.2 | RIDGEWOOD..... | | s 4.31 | s 5.11 | s 5.20 | s 5.50 |
| 67.6 | 1.1 | HOHOKUS..... | | s 4.28 | s 5.08 | s 5.17 | |
| 66.5 | 1.4 | WALDWICK.....N | | s 4.25 | s 5.05 | s 5.14 | s 5.45 |
| 65.1 | 1.9 | ALLENDALE..... | | | s 5.02 | s 5.11 | |
| 63.2 | 2.6 | RAMSEY..... | | s 4.20 | s 4.58 | s 5.08 | |
| 60.6 | 1.4 | MAHWAH..... | | | s 4.52 | s 5.03 | |
| 59.2 | 1.0 | SUFFERN.....N | | s 4.13 | s 4.50 | s 5.00 | 5.32 |
| 58.2 | 1.2 | HILLBURN..... | | | | | |
| 57.0 | 1.8 | RAMAPO..... | | | | | |
| 55.2 | 2.6 | SLOATSBURG..... | | s 4.06 | | | s 5.24 |
| 52.6 | 3.8 | TUXEDO..... | | s 4.01 | | | s 5.19 |
| 48.8 | 2.4 | SOUTHFIELDS..... | | f 3.55 | | | s 5.12 |
| 46.4 | 1.6 | ARDEN..... | | | | | s 5.06 |
| 44.8 | 1.0 | NEWBURGH JCT.....N | | 3.50 | | | 5.03 |
| 43.8 | 2.5 | HARRIMAN..... | | s 3.48 | | | s 5.00 |
| 41.3 | 2.8 | MONROE..... | | s 3.40 | | | s 4.55 |
| 38.5 | 2.2 | OXFORD..... | | | | | |
| 36.3 | 0.8 | GREYCOURT.....D | | | | | |
| 35.5 | 4.5 | CHESTER..... | | s 3.30 | | | s 4.44 |
| 31.0 | 3.9 | GOSHEN.....N | | s 3.22 | | | s 4.36 |
| 27.1 | 3.4 | NEW HAMPTON..... | | * | | | |
| 23.7 | 2.7 | MIDDLETOWN.....N | | s 3.10 | | | s 4.25 |
| 21.0 | 1.2 | HOWELLS JCT..... | | | | | |
| 19.8 | 4.7 | HOWELLS..... | | f 2.53 | | | |
| 15.1 | 5.0 | OTISVILLE..... | | s 2.45 | | | |
| 10.1 | 7.6 | GRAHAM.....N | | 2.38 | | | |
| 2.5 | 2.5 | PORT JERVIS..... L. N A. | | 2.25 | | | |
| .. | .. | SPARROWBUSH.....N | | | | | |
| | | | | P.M. | P.M. | P.M. | P.M. |

No. 62 reduce speed to 35 miles per hour at Howells to receive mail. Wednesdays, stop New Hampton, discharge passengers. Stop 5th Ave. crossing, West Paterson, to receive passengers. Will not operate west of Middletown on Saturdays.

Stop 5th Ave. crossing, West Paterson, to receive passengers.



## Port Jervis to Jersey City

### EASTWARD — FIRST CLASS — TRAINS (Read Up)

| 170 Daily | 28 Daily | | 2 Daily | 196 Daily Except Sunday | 146 Daily Except Saturday and Holiday | 256 Saturday Only | 172 Daily Except Saturday | |
|---|---|---|---|---|---|---|---|---|
| P.M. | P.M. | | P.M. | P.M. | P.M. | P.M. | P.M. | |
| 7.04 | 7.14 | | 7.14 | x | N.B. 8.24 | N.B. 9.04 | N.B. 9.14 | |
| 6.47 | 6.52 | | 7.00 | 7.35 | 8.05 | 8.45 | 8.57 | |
| 6.42 | 6.47 | | 6.55 | 7.30 | 8.00 | 8.40 | 8.52 | |
| s 6.33 | | | | | s 7.51 | s 8.30 | s 8.41 | |
| 6.31 | 6.37 | | 6.45 | 7.20 | 7.49 | 8.28 | 8.39 | |
| s 6.29 | | | | | * | | | |
| | | | | | * | s 8.25 | s 8.36 | |
| s 6.26 | s 6.32 | | * 6.40 | 7.05 | s 7.44 | s 8.21 | s 8.32 | |
| s 6.23 | | | | | * | s 8.12 | s 8.23 | |
| s 6.20 | | | | | * | s 8.09 | s 8.20 | |
| 6.17 | 6.23 | | 6.34 | 6.47 | 7.39 | 8.06 | 8.17 | |
| s 6.15 | s 6.21 | | s 6.32 | 6.45 | s 7.37 | s 8.04 | s 8.15 | |
| | | | | | * | | | |
| s 6.11 | | | | | s 7.34 | s 8.01 | | |
| * | | | | | s 7.32 | s 7.58 | s 8.09 | |
| 6.08 | 6.13 | | 6.25 | | 7.31 | 7.56 | 8.07 | |
| s 6.06 | s 6.11 | | s 6.24 | | s 7.30 | s 7.55 | s 8.06 | |
| s 6.03 | | | | | | | | |
| s 6.00 | 6.07 | | 6.20 | | s 7.25 | s 7.50 | s 8.02 | |
| s 5.57 | | | | | s 7.21 | s 7.46 | * | |
| s 5.54 | | | | | s 7.18 | s 7.43 | s 7.58 | |
| s 5.48 | | | | | s 7.12 | s 7.37 | s 7.52 | |
| s 5.45 | 5.58 | | * 6.11 | | s 7.10 | s 7.35 | s 7.50 | |
| | 5.49 | | 6.04 | | | | | |
| | 5.39 | | 5.55 | | | | | |
| | s 5.34 | | | | | | | |
| | s 5.24 | | 5.44 | | | | | |
| | s 5.17 | | * 5.37 | | | | | |
| | s 5.06 | | * 5.27 | | | | | |
| | * 4.52 | | | | | | | |
| | 4.45 | | 5.10 | | | | | |
| | 4.30 | | 4.58 | | | | | |
| | 4.18 | | 4.48 | | | | | |
| | 4.13 | | 4.43 | | | | | |
| P.M. | P.M. | | P.M. | P.M. | P.M. | P.M. | P.M. | |

No. 170 Saturday stop Glen Rock 6.09 p.m.

No. 28 Sunday and Holiday stop Otisville.

No. 2 stop Middletown and Goshen to discharge or take on passengers. Stop Suffern and Passaic, discharge passengers from west of Port Jervis.

Will operate west of Waldwick Sundays only. Sundays stop River St., Lake View, Clifton, Passaic Park and Carlton Hill. Arrive Jersey City 8.20 P.M.

Sunday and holiday stop Allendale.

## Port Jervis to Jersey City

EASTWARD — FIRST CLASS — TRAINS (Read Up)

| Distance from Sparrowbush | Distance between Stations | No. 36 STATIONS | 708 Sunday and Holiday Only | | 64 Daily Except Sunday and Holiday | | |
|---|---|---|---|---|---|---|---|
| | | | P.M. | | P.M. | | |
| .. | . | NEW YORK Chambers St. (Ferry) A. | 9.39 | | 9.39 | | |
| 89.8 | 2.2 | JERSEY CITY.....A. N | 9.17 | | 9.27 | | |
| 87.6 | 6.3 | CROXTON.....N | 9.12 | | 9.22 | | |
| 81.3 | 0.5 | RUTHERFORD | s 9.02 | | s 9.12 | | |
| 80.8 | 0.7 | RUTHERFORD JCT. N | 9.00 | | 9.10 | | |
| 80.1 | 0.6 | CARLTON HILL | | | | | |
| 79.5 | 0.7 | PASSAIC PARK | | | | | |
| 78.8 | 0.5 | PROSPECT ST. | | | | | |
| 78.3 | 0.4 | PASSAIC | s 8.55 | | s 9.05 | | |
| 77.9 | 0.5 | HARRISON ST. | | | | | |
| 77.4 | 1.4 | CLIFTON | s 8.52 | | | | |
| 76.0 | 1.2 | LAKE VIEW | | | | | |
| 74.8 | 0.7 | XW TOWER.....N | 8.49 | | 8.59 | | |
| 74.1 | 1.0 | PATERSON | s 8.47 | | s 8.57 | | |
| 73.1 | 1.0 | RIVER ST. | | | | | |
| 72.1 | 1.8 | HAWTHORNE | | | | | |
| 70.3 | 0.8 | GLEN ROCK | | | | | |
| 69.5 | 0.7 | RIDGEWOOD JCT.....N | 8.39 | | 8.49 | | |
| 68.8 | 1.2 | RIDGEWOOD | s 8.37 | | s 8.47 | | |
| 67.6 | 1.1 | HOHOKUS | | | | | |
| 66.5 | 1.4 | WALDWICK.....N | s 8.32 | | s 8.42 | | |
| 65.1 | 1.9 | ALLENDALE | | | s 8.38 | | |
| 63.2 | 2.6 | RAMSEY | s 8.26 | | s 8.35 | | |
| 60.6 | 1.4 | MAHWAH | | No. 64 reduce speed to 35 miles per hour at Howells to receive U. S. Mail. | | | |
| 59.2 | 1.0 | SUFFERN.....N | s 8.18 | | s 8.28 | | |
| 58.2 | 1.2 | HILLBURN | | | | | |
| 57.0 | 1.8 | RAMAPO | | | | | |
| 55.2 | 2.6 | SLOATSBURG | s 8.11 | | | | |
| 52.6 | 3.8 | TUXEDO | s 8.06 | | s 8.15 | | |
| 48.8 | 2.4 | SOUTHFIELDS | s 8.00 | | | | |
| 46.4 | 1.6 | ARDEN | s 7.56 | | | | |
| 44.8 | 1.0 | NEWBURGH JCT.....N | 7.54 | | 8.06 | | |
| 43.8 | 2.5 | HARRIMAN | s 7.52 | | s 8.04 | | |
| 41.3 | 2.8 | MONROE | s 7.44 | | s 7.58 | | |
| 38.5 | 2.2 | OXFORD | | | | | |
| 36.3 | 0.8 | GREYCOURT.....D | | | | | |
| 35.5 | 4.5 | CHESTER | s 7.34 | | s 7.49 | | |
| 31.0 | 3.9 | GOSHEN.....N | s 7.26 | | s 7.41 | | |
| 27.1 | 3.4 | NEW HAMPTON | | | | | |
| 23.7 | 2.7 | MIDDLETOWN.....N | s 7.14 | | s 7.30 | | |
| 21.0 | 1.2 | HOWELLS JCT. | | | | | |
| 19.8 | 4.7 | HOWELLS | s 7.03 | | | | |
| 15.1 | 5.0 | OTISVILLE | s 6.56 | | s 7.14 | | |
| 10.1 | 7.6 | GRAHAM.....N | 6.49 | | 7.08 | | |
| 2.5 | 2.5 | PORT JERVIS..... L. N A. | 6.35 | | 6.55 | | |
| .. | .. | SPARROWBUSH.....N | | | | | |
| | | | P.M. | | P.M. | | |



## Port Jervis to Jersey City

EASTWARD — FIRST CLASS — TRAINS (Read Up)

| 148 Daily | 174 Daily Except Saturday | 258 Saturday Only | 8 Daily | 176 Daily Except Saturday | 178 Daily | 68 Daily | | |
|---|---|---|---|---|---|---|---|---|
| P.M. | P.M. | P.M. | P.M. | P.M. | A.M. | A.M. | | |
| N.B. 10.24 | N.B. 10.54 | N.B. 11.24 | N.B. 11.24 | N.B. 11.49 | 12.19 | 12.54 | | |
| 10.05 | 10.40 | 10.50 | 11.10 | 11.28 | 12.05 | 12.42 | | |
| 10.00 | 10.35 | 10.45 | 11.00 | 11.23 | 12.00 | 12.37 | | |
| s 9.50 | s10.25 | s10.35 | | s11.14 | s11.50 | s12.27 | | |
| 9.48 | 10.23 | 10.33 | 10.50 | 11.12 | 11.48 | 12.25 | | |
| * | | | | | | s12.23 | | |
| s 9.43 | | | | s11.10 | | | | |
| s 9.40 | s10.18 | s10.28 | (B.C.R.R.) Stop Ridgewood, discharge passengers, Binghamton, west. | s11.07 | s11.43 | s12.20 | | |
| s 9.37 | s10.15 | s10.25 | | s11.04 | s11.38 | s12.17 | | |
| s 9.34 | | | | s11.01 | s11.35 | s12.14 | | |
| 9.32 | 10.12 | 10.22 | | 10.58 | 11.32 | 12.11 | | |
| s 9.30 | s10.10 | s10.20 | | s10.56 | s11.30 | s12.09 | | |
| | s10.08 | s10.18 | | | | | | |
| | s10.06 | s10.16 | | s10.52 | s11.25 | | | |
| | | | | s10.49 | s11.22 | | | |
| | 10.03 | 10.13 | 10.40 | 10.47 | 11.20 | 11.59 | | |
| | s10.01 | s10.11 | *10.39 | s10.46 | s11.18 | s11.57 | | |
| | s 9.58 | s10.08 | | | | | | |
| | s 9.55 | s10.05 | 10.35 | s10.41 | s11.14 | s11.53 | | |
| | s 9.52 | s10.02 | | | s11.11 | s11.50 | | |
| | s 9.49 | s 9.59 | | | s11.08 | s11.47 | | |
| | s 9.43 | s 9.53 | | | s11.02 | | | |
| | s 9.40 | s 9.50 | 10.28 | | s11.00 | s11.40 | | |
| | | | | | | s11.32 | | |
| | | | 10.21 | | | s11.27 | | |
| | | | | | | s11.20 | | |
| | | | 10.12 | | | 11.14 | | |
| | | | | | | s11.12 | | |
| | | | | | | s11.07 | | |
| | | | 10.02 | | | | | |
| | | | | | | s10.57 | | |
| | | | 9.55 | | | s10.50 | | |
| | | | | | | * | | |
| | | | s 9.46 | | | s10.40 | | |
| No. 148 Sundays stop Carlton Hill. | | | | | | Stop New Hampton to discharge passengers. | | |
| | | | 9.28 | | | | | |
| | | | 9.16 | | | | | |
| | | | 9.06 | | | | | |
| | | | 9.01 | | | | | |
| P.M. | P.M. | P.M. | P.M. | P.M. | P.M. | P.M. | | |

## Jersey City to Port Jervis

WESTWARD — FIRST CLASS — TRAINS (Read Down)

| Distance from Jersey City | Distance between Stations | No. 36 STATIONS | 177 Daily | 7 Daily | 51 Daily Except Sunday | 179 Daily | 191 Daily Except Sunday |
|---|---|---|---|---|---|---|---|
| | | | P.M. | P.M. | A.M. | A.M. | A.M. |
| .. | .. | NEW YORK Chambers St. (Ferry) ..L. | N.B. 11.55 | 11.55 | 12.30 | N.B. 1.00 | x |
| | | | A.M. | A.M. | | | |
| .. | .. | JERSEY CITY.....L. N | 12.10 | 12.30 | 12.50 | 1.15 | 3.45 |
| 2.2 | 2.2 | CROXTON.....N | 12.15 | 12.35 | 12.55 | 1.20 | 3.50 |
| 8.5 | 6.3 | RUTHERFORD..... | s12.25 | | s 1.05 | s 1.30 | |
| 9.0 | 0.5 | RUTHERFORD JCT. N | 12.27 | 12.45 | 1.07 | 1.32 | 4.10 |
| 9.7 | 0.7 | CARLTON HILL..... | s12.29 | | s 1.09 | s 1.34 | |
| 10.3 | 0.6 | PASSAIC PARK..... | s12.31 | (B.C.R.R.) Stop Middletown, discharge passengers. | s 1.11 | s 1.36 | |
| 11.0 | 0.7 | PROSPECT ST..... | | | | | |
| 11.5 | 0.5 | PASSAIC..... | s12.34 | | s 1.15 | s 1.39 | 4.20 |
| 11.9 | 0.4 | HARRISON ST..... | | | | | |
| 12.4 | 0.5 | CLIFTON..... | s12.42 | | s 1.18 | s 1.42 | 4.25 |
| 13.8 | 1.4 | LAKE VIEW..... | s12.45 | | * | s 1.45 | |
| 15.0 | 1.2 | XW TOWER.....N | 12.49 | | 1.25 | 1.48 | 4.30 |
| 15.7 | 0.7 | PATERSON..... | s12.52 | | s 1.27 | s 1.50 | 4.40 |
| 16.7 | 1.0 | RIVER ST..... | s12.54 | | s 1.29 | | |
| 17.7 | 1.0 | HAWTHORNE..... | s12.57 | | * | s 1.54 | |
| 19.5 | 1.8 | GLEN ROCK..... | s 1.01 | | * | s 1.58 | |
| 20.3 | 0.8 | RIDGEWOOD JCT.....N | 1.03 | 12.57 | 1.37 | 2.00 | 4.50 |
| 21.0 | 0.7 | RIDGEWOOD..... | s 1.06 | | s 1.39 | s 2.03 | |
| 22.2 | 1.2 | HOHOKUS..... | s 1.09 | | s 1.42 | s 2.06 | |
| 23.3 | 1.1 | WALDWICK.....N | s 1.12 | 1.01 | s 1.46 | s 2.09 | 5.00 |
| 24.7 | 1.4 | ALLENDALE..... | s 1.16 | | s 1.50 | s 2.13 | |
| 26.6 | 1.9 | RAMSEY..... | s 1.21 | | s 1.55 | s 2.18 | |
| 29.2 | 2.6 | MAHWAH..... | s 1.26 | | s 2.00 | s 2.23 | |
| 30.6 | 1.4 | SUFFERN.....N | s 1.30 | 1.09 | s 2.03 | s 2.26 | |
| 31.6 | 1.0 | HILLBURN..... | | | | | |
| 32.8 | 1.2 | RAMAPO..... | | | | | |
| 34.6 | 1.8 | SLOATSBURG..... | | | | | |
| 37.2 | 2.6 | TUXEDO..... | | 1.17 | 2.12 | | |
| 41.0 | 3.8 | SOUTHFIELDS..... | | | | | |
| 43.4 | 2.4 | ARDEN..... | | | | | |
| 45.0 | 1.6 | NEWBURGH JCT.....N | | 1.25 | 2.22 | | |
| 46.0 | 1.0 | HARRIMAN..... | | | | | |
| 48.5 | 2.5 | MONROE..... | | | s 2.27 | | |
| 51.3 | 2.8 | OXFORD..... | | | | | |
| 53.5 | 2.2 | GREYCOURT.....D | | 1.33 | 2.35 | | |
| 54.3 | 0.8 | CHESTER..... | | | * | | |
| 58.8 | 4.5 | GOSHEN.....N | | 1.39 | s 2.44 | | |
| 62.7 | 3.9 | NEW HAMPTON..... | | | | | |
| 66.1 | 3.4 | MIDDLETOWN.....N | | * 1.51 | s 3.05 | | |
| 68.8 | 2.7 | HOWELLS JCT..... | | | | | |
| 70.0 | 1.2 | HOWELLS..... | | | | | |
| 74.7 | 4.7 | OTISVILLE..... | | | | | |
| 79.7 | 5.0 | GRAHAM.....N | | 2.13 | 3.39 | | |
| 87.3 | 7.6 | PORT JERVIS..... A. | | 2.25 | 3.50 | | |
| | | L. N | | 2.35 | | | |
| 89.8 | 2.5 | SPARROWBUSH.....N | | 2.40 | | | |
| | | | A.M. | A.M. | A.M. | A.M. | A.M. |

No. 51 stop Lake View, Hawthorne, Glen Rock and Chester discharge passengers.



## Jersey City to Port Jervis

WESTWARD — FIRST CLASS — TRAINS (Read Down)

| 55 Daily Except Sunday | | 57 Sunday Only | 101 Daily Except Saturday and Sunday | 251 Saturday Only | 103 Daily Except Saturday Sunday & Holiday | 151 Daily | 153 Daily Except Sunday | 59 Sunday Only |
|---|---|---|---|---|---|---|---|---|
| A.M. | | A.M. | A.M. | A.M. | A.M. | A.M. | A.M. | A.M. |
| 4.00 | | 4.30 | 5.45 | 6.15 | 6.45 | 7.00 | 8.00 | 8.10 |
| 4.30 | | 4.55 | 6.00 | 6.30 | 6.58 | 7.20 | 8.15 | 8.25 |
| 4.35 | | 5.00 | 6.05 | 6.35 | 7.03 | 7.25 | 8.20 | 8.30 |
| s 4.50 | | s 5.10 | s 6.15 | s 6.45 | s 7.13 | s 7.35 | s 8.31 | s 8.40 |
| 4.52 | | 5.12 | 6.17 | 6.47 | 7.15 | 7.37 | 8.33 | 8.42 |
| * | | * | | s 6.49 | s 7.17 | * | s 8.35 | s 8.44 |
| * | | * | | s 6.51 | s 7.19 | * | s 8.37 | s 8.46 |
| * | | | | | | s 7.40 | | |
| s 5.05 | | s 5.18 | s 6.23 | s 6.54 | s 7.22 | s 7.43 | s 8.42 | s 8.49 |
| s 5.09 | | s 5.21 | s 6.26 | s 6.57 | s 7.25 | s 7.46 | s 8.45 | s 8.52 |
| s 5.12 | | s 5.24 | s 6.29 | s 7.00 | s 7.28 | s 7.49 | s 8.48 | s 8.55 |
| 5.16 | | 5.28 | 6.33 | 7.03 | 7.31 | 7.52 | 8.52 | 8.58 |
| s 5.27 | | s 5.31 | s 6.37 | s 7.06 | s 7.33 | s 7.56 | s 8.55 | s 9.00 |
| | | | s 6.39 | s 7.08 | s 7.35 | s 7.58 | s 8.57 | |
| * | | | s 6.42 | s 7.11 | s 7.39 | s 8.01 | s 9.00 | s 9.04 |
| s 5.34 | | f 5.37 | | s 7.15 | s 7.43 | s 8.05 | s 9.04 | s 9.08 |
| 5.36 | | 5.39 | 6.46 | 7.17 | 7.45 | 8.07 | 9.06 | 9.10 |
| s 5.45 | No. 55 will stop at Carlton Hill, Passaic Park, Prospect St. and Hawthorne to discharge passengers. | s 5.42 | s 6.50 | s 7.19 | s 7.47 | s 8.12 | s 9.08 | s 9.12 |
| s 5.49 | | f 5.46 | s 6.53 | s 7.22 | f 7.50 | s 8.15 | f 9.11 | |
| s 5.53 | | s 5.49 | s 6.57 | s 7.25 | s 7.53 | s 8.18 | s 9.14 | s 9.16 |
| s 5.58 | | s 5.53 | s 7.02 | s 7.30 | | s 8.23 | s 9.19 | s 9.19 |
| s 6.03 | | s 5.58 | s 7.07 | s 7.35 | | s 8.28 | s 9.25 | s 9.24 |
| s 6.10 | | s 6.04 | s 7.12 | s 7.40 | | s 8.33 | s 9.31 | s 9.29 |
| s 6.18 | | s 6.09 | s 7.16 | s 7.44 | | s 8.38 | s 9.36 | s 9.33 |
| s 6.27 | | s 6.12 | | | | | | |
| s 6.30 | | | | | | | | |
| s 6.35 | | s 6.17 | | | | | | s 9.40 |
| s 6.45 | | s 6.22 | | | | | | s 9.45 |
| s 6.50 | | s 6.28 | | | | | | * |
| s 6.55 | | f 6.33 | | | | | | * |
| 6.58 | | 6.36 | | | | | | 9.57 |
| s 7.02 | | s 6.39 | | | | | | |
| s 7.12 | | s 6.44 | | | | | | |
| | | | | | | | | |
| s 7.25 | | s 6.54 | | | | | | |
| s 7.32 | No. 57 will stop Carlton Hill and Passaic Park discharge passengers. | s 7.02 | | | Stop Fifth Ave. crossing, West Paterson, discharge passengers. | Will not operate west of Paterson on Sundays. Stop 5th Ave. crossing, West Paterson, discharge passengers. Sundays stop Carlton Hill and Passaic Park, discharge passengers. | Stop Fifth Ave. crossing West Paterson to discharge passengers. | Stop Southfields, and Arden, discharge passengers. |
| s 7.40 | | f 7.07 | | | | | | |
| s 8.05 | | s 7.25 | | | | | | |
| | | | | | | | | |
| s 8.15 | | f 7.33 | | | | | | |
| s 8.30 | | s 7.45 | | | | | | |
| f 8.38 | | f 7.53 | | | | | | |
| 8.50 | | 8.05 | | | | | | |
| | | | | | | | | |
| A.M. | | A.M. | A.M. | A.M. | A.M. | A.M. | A.M. | A.M. |

## Jersey City to Port Jervis

### WESTWARD — FIRST CLASS — TRAINS (Read Down)

| Distance from Jersey City | Distance between Stations | No. 36 STATIONS | | 1 Daily | 105 Daily Except Sunday and Holiday | 701 Sunday and Holiday Only | |
|---|---|---|---|---|---|---|---|
| | | | | A.M. | A.M. | A.M. | |
| .. | .. | NEW YORK Chambers St. (Ferry) L. | | 8.40 | N.B. 9.00 | 9.10 | |
| .. | .. | JERSEY CITY L.N | | 9.00 | 9.20 | 9.35 | |
| 2.2 | 2.2 | CROXTON N | | 9.05 | 9.25 | 9.40 | |
| 8.5 | 6.3 | RUTHERFORD | | | s 9.35 | s 9.50 | |
| 9.0 | 0.5 | RUTHERFORD JCT. N | | 9.14 | 9.37 | 9.52 | |
| 9.7 | 0.7 | CARLTON HILL | | | * | | |
| 10.3 | 0.6 | PASSAIC PARK | | | * | | |
| 11.0 | 0.7 | PROSPECT ST. | | | | | |
| 11.5 | 0.5 | PASSAIC | | * 9.19 | s 9.43 | s 9.57 | |
| 11.9 | 0.4 | HARRISON ST. | | | | | |
| 12.4 | 0.5 | CLIFTON | | | s 9.46 | | |
| 13.8 | 1.4 | LAKE VIEW | | | s 9.49 | | |
| 15.0 | 1.2 | XW TOWER N | | 9.24 | 9.52 | 10.03 | |
| 15.7 | 0.7 | PATERSON | | s 9.26 | s 9.55 | s10.05 | |
| 16.7 | 1.0 | RIVER ST. | | | | | |
| 17.7 | 1.0 | HAWTHORNE | | | | | |
| 19.5 | 1.8 | GLEN ROCK | | | | | |
| 20.3 | 0.8 | RIDGEWOOD JCT. N | | 9.33 | | 10.13 | |
| 21.0 | 0.7 | RIDGEWOOD | | s 9.35 | | s10.15 | |
| 22.2 | 1.2 | HOHOKUS | | | | | |
| 23.3 | 1.1 | WALDWICK N | | 9.39 | | s10.20 | |
| 24.7 | 1.4 | ALLENDALE | | | | s10.25 | |
| 26.6 | 1.9 | RAMSEY | | | | s10.30 | |
| 29.2 | 2.6 | MAHWAH | | | | | |
| 30.6 | 1.4 | SUFFERN N | | * 9.48 | | s10.38 | |
| 31.6 | 1.0 | HILLBURN | | | | | |
| 32.8 | 1.2 | RAMAPO | | | | | |
| 34.6 | 1.8 | SLOATSBURG | | | | s10.44 | |
| 37.2 | 2.6 | TUXEDO | | 9.57 | | s10.49 | |
| 41.0 | 3.8 | SOUTHFIELDS | | | | f10.56 | |
| 43.4 | 2.4 | ARDEN | | | | f11.01 | |
| 45.0 | 1.6 | NEWBURGH JCT. N | | 10.05 | | 11.03 | |
| 46.0 | 1.0 | HARRIMAN | No. 1 stop Goshen and Middletown to discharge or take on passengers. Stop Passaic, Suffern to receive passengers for Binghamton, west. | | No. 105 stop Carlton Hill and Passaic Park to discharge passengers. | s11.05 | |
| 48.5 | 2.5 | MONROE | | | | s11.10 | |
| 51.3 | 2.8 | OXFORD | | | | | |
| 53.5 | 2.2 | GREYCOURT D | | 10.13 | | | |
| 54.3 | 0.8 | CHESTER | | | | | |
| 58.8 | 4.5 | GOSHEN N | | *10.19 | | | |
| 62.7 | 3.9 | NEW HAMPTON | | | | | |
| 66.1 | 3.4 | MIDDLETOWN N | | *10.30 | | | |
| 68.8 | 2.7 | HOWELLS JCT. | | | | | |
| 70.0 | 1.2 | HOWELLS | | | | | |
| 74.7 | 4.7 | OTISVILLE | | | | | |
| 79.7 | 5.0 | GRAHAM N | | 10.49 | | | |
| 87.3 | 7.6 | PORT JERVIS A. | | 11.01 | | | |
| | | L. N | | 11.11 | | | |
| 89.8 | 2.5 | SPARROWBUSH N | | 11.16 | | | |
| | | | | A.M. | A.M. | A.M. | |



## Jersey City to Port Jervis

### WESTWARD — FIRST CLASS — TRAINS (Read Down)

| | 9 Daily | 107 Daily | 109 Daily | 199 Daily Except Sunday | 703 Sunday Only | 231 Saturday Only Except Holiday | 307 Saturday Only Except Holiday | 157 Daily Except Sunday |
|---|---|---|---|---|---|---|---|---|
| | A.M. | A.M. | A.M. | A.M. | P.M. | P.M. | P.M. | P.M. |
| | 9.40 | 10.20 | 11.10 | x | N.B. 12.00 | N.B. 12.00 | N.B. 12.10 | 12.30 |
| | 10.00 | 10.35 | 11.25 | 11.30 | 12.15 | 12.15 | 12.30 | 12.47 |
| | 10.05 | 10.40 | 11.30 | 11.35 | 12.20 | 12.20 | 12.35 | 12.52 |
| | | s10.50 | s11.40 | 11.50 | s12.30 | s12.30 | (Newark Branch.) | s 1.02 |
| | 10.15 | 10.52 | 11.42 | 11.52 | 12.32 | 12.32 | | 1.04 |
| | | | *11.44 | | s12.34 | s12.34 | | s 1.06 |
| | | s10.55 | | | s12.36 | s12.36 | | s 1.08 |
| | s10.20 | s10.59 | s11.50 | 12.01 | s12.40 | s12.40 | | s 1.13 |
| | | s11.02 | s11.53 | 12.05 | s12.43 | s12.43 | | s 1.16 |
| | | s11.05 | | | s12.46 | s12.46 | | s 1.19 |
| | 10.26 | 11.08 | 11.57 | 12.08 | 12.49 | 12.49 | 1.15 | 1.22 |
| | s10.29 | s11.11 | s12.03 | 12.10 | s12.51 | s12.51 | s 1.17 | s 1.26 |
| | | | | | s12.53 | s12.53 | | s 1.28 |
| | | s11.15 | | | s12.56 | s12.56 | | s 1.31 |
| | | s11.19 | f12.09 | | s12.59 | s 1.00 | | s 1.35 |
| | 10.37 | 11.21 | 12.11 | | 1.01 | 1.02 | | 1.37 |
| No. 9 Stop Chester Friday and Saturday. Stop New Hampton Wednesdays, discharge passengers from New York. Stop Otisville Friday, Saturday, Sunday and Holiday, discharge passengers from New York. | s10.39 | s11.23 | s12.19 | | s 1.04 | s 1.05 | | s 1.42 |
| | | f11.26 | s12.22 | | s 1.07 | s 1.09 | | s 1.45 |
| | 10.45 | s11.30 | s12.25 | | s 1.10 | s 1.12 | | s 1.49 |
| | | | f12.29 | | s 1.12 | | | s 1.54 |
| | | | s12.34 | | s 1.17 | | | s 1.59 |
| | | | f12.39 | | s 1.23 | | | s 2.05 |
| | s10.57 | | s12.42 | | s 1.26 | | | s 2.10 |
| | 11.07 | | | | 1.38 | | | |
| | 11.17 | | | | 1.50 | | | |
| | s11.26 | | | | | | | |
| | *11.36 | | | | s 2.03 | | | |
| | s11.45 | | Sunday stop Carlton Hill. Arrive Suffern 12.49 P.M. | | s 2.12 | | | |
| | * | | | | | | | |
| | s12.00 | | | | s 2.25 | | | |
| | * | | | | | Will operate Feb. 12. | Will operate Feb. 12. | Saturdays arrive Suffern 2.15 P.M. |
| | 12.32 | | | | | | | |
| | 12.44 | | | | | | | |
| | 12.54 | | | | | | | |
| | 1.01 | | | | | | | |
| | P.M. | A.M. | P.M. | P.M. | P.M. | P.M. | P.M. | P.M. |

## Jersey City to Port Jervis

WESTWARD — FIRST CLASS — TRAINS (Read Down)

| Distance from Jersey City | Distance between Stations | No. 36 STATIONS | 205 Saturday Only Except Holiday | 233 Saturday Only Except Holiday | 253 Saturday & Sunday Only | | |
|---|---|---|---|---|---|---|---|
| | | | P.M. | P.M. | P.M. | | |
| .. | .. | NEW YORK Chambers St. (Ferry) L. | N.B. 12.40 | N.B. 12.50 | N.B. 1.10 | | |
| .. | .. | JERSEY CITY L. N | 12.52 | 1.02 | 1.22 | | |
| 2.2 | 2.2 | CROXTON N | 12.57 | 1.07 | 1.27 | | |
| 8.5 | 6.3 | RUTHERFORD | | | s 1.37 | | |
| 9.0 | 0.5 | RUTHERFORD JCT. N | 1.06 | 1.16 | 1.39 | | |
| 9.7 | 0.7 | CARLTON HILL | | | s 1.41 | | |
| 10.3 | 0.6 | PASSAIC PARK | | | s 1.43 | | |
| 11.0 | 0.7 | PROSPECT ST. | | | | | |
| 11.5 | 0.5 | PASSAIC | (B.C.R.R.) | (B.C.R.R.) | s 1.47 | | |
| 11.9 | 0.4 | HARRISON ST. | | | | | |
| 12.4 | 0.5 | CLIFTON | | | s 1.50 | | |
| 13.8 | 1.4 | LAKE VIEW | | | s 1.53 | | |
| 15.0 | 1.2 | XW TOWER N | | | 1.56 | | |
| 15.7 | 0.7 | PATERSON | | | s 1.59 | | |
| 16.7 | 1.0 | RIVER ST. | | | s 2.01 | | |
| 17.7 | 1.0 | HAWTHORNE | | | s 2.04 | | |
| 19.5 | 1.8 | GLEN ROCK | | | s 2.08 | | |
| 20.3 | 0.8 | RIDGEWOOD JCT. N | 1.18 | 1.35 | 2.11 | | |
| 21.0 | 0.7 | RIDGEWOOD | | s 1.37 | s 2.13 | | |
| 22.2 | 1.2 | HOHOKUS | | s 1.41 | | | |
| 23.3 | 1.1 | WALDWICK N | 1.22 | s 1.45 | s 2.17 | | |
| 24.7 | 1.4 | ALLENDALE | s 1.23 | | s 2.21 | | |
| 26.6 | 1.9 | RAMSEY | s 1.28 | | s 2.26 | | |
| 29.2 | 2.6 | MAHWAH | s 1.33 | | s 2.31 | | |
| 30.6 | 1.4 | SUFFERN N | s 1.36 | | s 2.34 | | |
| 31.6 | 1.0 | HILLBURN | | | | | |
| 32.8 | 1.2 | RAMAPO | | | | | |
| 34.6 | 1.8 | SLOATSBURG | s 1.42 | | | | |
| 37.2 | 2.6 | TUXEDO | s 1.47 | | | | |
| 41.0 | 3.8 | SOUTHFIELDS | s 1.54 | | | | |
| 43.4 | 2.4 | ARDEN | f 1.58 | | | | |
| 45.0 | 1.6 | NEWBURGH JCT. N | 2.01 | | | | |
| 46.0 | 1.0 | HARRIMAN | s 2.03 | | | | |
| 48.5 | 2.5 | MONROE | s 2.08 | | | | |
| 51.3 | 2.8 | OXFORD | | | | | |
| 53.5 | 2.2 | GREYCOURT D | | | | | |
| 54.3 | 0.8 | CHESTER | s 2.18 | | | | |
| 58.8 | 4.5 | GOSHEN N | s 2.26 | | | | |
| 62.7 | 3.9 | NEW HAMPTON | | | | | |
| 66.1 | 3.4 | MIDDLETOWN N | s 2.40 | | | | |
| 68.8 | 2.7 | HOWELLS JCT. | | | | | |
| 70.0 | 1.2 | HOWELLS | | Will operate Feb. 12. | Will not operate Dec. 25 and Jan. 1. | | |
| 74.7 | 4.7 | OTISVILLE | | | | | |
| 79.7 | 5.0 | GRAHAM N | | | | | |
| 87.3 | 7.6 | PORT JERVIS A. L. N | | | | | |
| 89.8 | 2.5 | SPARROWBUSH N | | | | | |
| | | | P.M. | P.M. | P.M. | | |



## Jersey City to Port Jervis

WESTWARD — FIRST CLASS — TRAINS (Read Down)

| | 111 Daily Except Saturday Sunday & Holiday | | 255 Saturday Only Except Holiday | 61 Daily Except Sunday | | 705 Sunday Only | | |
|---|---|---|---|---|---|---|---|---|
| | P.M. | | P.M. | P.M. | | P.M. | | |
| | 1.10 | | N.B. 1.30 | 1.50 | | 2.00 | | |
| | 1.25 | | 1.45 | 2.10 | | 2.15 | | |
| | 1.30 | | 1.50 | 2.15 | | 2.20 | | |
| | s 1.40 | | s 2.00 | s 2.25 | | s 2.30 | | |
| | 1.42 | | 2.02 | 2.27 | | 2.32 | | |
| | * | | | | | | | |
| | s 1.46 | | (B.C.R.R.) | s 2.33 | | s 2.37 | | |
| | s 1.49 | | | s 2.36 | | s 2.40 | | |
| | 1.53 | | | 2.40 | | 2.44 | | |
| | s 1.55 | | | s 2.45 | | s 2.46 | | |
| | | | | s 2.49 | | s 2.50 | | |
| | | | | s 2.53 | | s 2.54 | | |
| | | | 2.22 | 2.55 | | 2.56 | | |
| | | | s 2.24 | s 2.59 | | s 2.59 | | |
| | | | s 2.27 | s 3.02 | | s 3.02 | | |
| | | | s 2.30 | s 3.05 | | s 3.05 | | |
| | | | s 2.34 | s 3.09 | | s 3.09 | | |
| | | | s 2.39 | s 3.13 | | s 3.13 | | |
| | | | s 2.44 | s 3.18 | | s 3.18 | | |
| | | | s 2.48 | s 3.22 | | s 3.22 | | |
| | | | | s 3.24 | | f 3.24 | | |
| | | | | s 3.31 | | | | |
| | | | | s 3.36 | | s 3.34 | | |
| | | | | f 3.43 | | * | | |
| | | | | 3.48 | | 3.46 | | |
| | Stop Carlton Hill to discharge passengers. | | | s 3.50 | | s 3.49 | | |
| | | | | s 3.55 | | s 3.54 | | |
| | | | | f 4.00 | | | | |
| | | | | s 4.06 | | s 4.04 | | |
| | | | | s 4.15 | | s 4.12 | | |
| | | | | s 4.20 | | | | |
| | | | | s 4.29 | | s 4.24 | | |
| | | | Will operate Feb. 12. | s 4.36 | | | No. 705 stop Southfields to discharge passengers. | |
| | | | | s 4.45 | | f 4.39 | | |
| | | | | 4.52 | | 4.48 | | |
| | | | | 5.05 | | 5.00 | | |
| | P.M. | | P.M. | P.M. | | P.M. | | |

## Jersey City to Port Jervis

WESTWARD — FIRST CLASS — TRAINS (Read Down)

| Distance from Jersey City | Distance between Stations | No. 36 STATIONS | | | 113 | 257 | 115 |
|---|---|---|---|---|---|---|---|
| | | | | | Daily Except Saturday and Sunday | Saturday Only Except Holiday | Daily |
| | | | | | P.M. | P.M. | P.M. |
| .. | .. | NEW YORK Chambers St. (Ferry) L. | | | 2.20 | N.B. 2.30 | N.B. 3.10 |
| .. | .. | JERSEY CITY L. N | | | 2.35 | 2.45 | 3.25 |
| 2.2 | 2.2 | CROXTON N | | | 2.40 | 2.50 | 3.30 |
| 8.5 | 6.3 | RUTHERFORD | | | s 2.50 | s 3.00 | s 3.40 |
| 9.0 | 0.5 | RUTHERFORD JCT. N | | | 2.52 | 3.02 | 3.42 |
| 9.7 | 0.7 | CARLTON HILL | | | s 2.54 | s 3.04 | s 3.44 |
| 10.3 | 0.6 | PASSAIC PARK | | | s 2.56 | s 3.06 | s 3.46 |
| 11.0 | 0.7 | PROSPECT ST. | | | | | |
| 11.5 | 0.5 | PASSAIC | | | s 3.00 | s 3.11 | s 3.50 |
| 11.9 | 0.4 | HARRISON ST. | | | | | |
| 12.4 | 0.5 | CLIFTON | | | s 3.03 | s 3.14 | s 3.53 |
| 13.8 | 1.4 | LAKE VIEW | | | s 3.06 | s 3.17 | s 3.56 |
| 15.0 | 1.2 | XW TOWER N | | | 3.09 | 3.20 | 3.59 |
| 15.7 | 0.7 | PATERSON | | | s 3.12 | s 3.25 | s 4.02 |
| 16.7 | 1.0 | RIVER ST. | | | s 3.14 | | s 4.04 |
| 17.7 | 1.0 | HAWTHORNE | | | s 3.17 | s 3.28 | s 4.07 |
| 19.5 | 1.8 | GLEN ROCK | | | s 3.21 | s 3.32 | s 4.11 |
| 20.3 | 0.8 | RIDGEWOOD JCT. N | | | 3.23 | 3.34 | 4.13 |
| 21.0 | 0.7 | RIDGEWOOD | | | s 3.26 | s 3.38 | s 4.15 |
| 22.2 | 1.2 | HOHOKUS | | | s 3.29 | s 3.41 | s 4.18 |
| 23.3 | 1.1 | WALDWICK N | | | s 3.32 | s 3.44 | s 4.21 |
| 24.7 | 1.4 | ALLENDALE | | | | s 3.47 | |
| 26.6 | 1.9 | RAMSEY | | | | s 3.52 | |
| 29.2 | 2.6 | MAHWAH | | | | s 3.57 | |
| 30.6 | 1.4 | SUFFERN N | | | | s 4.02 | |
| 31.6 | 1.0 | HILLBURN | | | | | |
| 32.8 | 1.2 | RAMAPO | | | | | |
| 34.6 | 1.8 | SLOATSBURG | | | | | |
| 37.2 | 2.6 | TUXEDO | | | | | |
| 41.0 | 3.8 | SOUTHFIELDS | | | | | |
| 43.4 | 2.4 | ARDEN | | | | | |
| 45.0 | 1.6 | NEWBURGH JCT. N | | | | | |
| 46.0 | 1.0 | HARRIMAN | | | | | |
| 48.5 | 2.5 | MONROE | | | | | |
| 51.3 | 2.8 | OXFORD | | | | | |
| 53.5 | 2.2 | GREYCOURT D | | | | | |
| 54.3 | 0.8 | CHESTER | | | | | |
| 58.8 | 4.5 | GOSHEN N | | | | | |
| 62.7 | 3.9 | NEW HAMPTON | | | | | |
| 66.1 | 3.4 | MIDDLETOWN N | | | | | |
| 68.8 | 2.7 | HOWELLS JCT. | | | | | |
| 70.0 | 1.2 | HOWELLS | | | Will operate Dec. 25 and Jan. 1 | Will operate Feb 12 | |
| 74.7 | 4.7 | OTISVILLE | | | | | |
| 79.7 | 5.0 | GRAHAM N | | | | | |
| 87.3 | 7.6 | PORT JERVIS A. L. N | | | | | |
| 89.8 | 2.5 | SPARROWBUSH N | | | | | |
| | | | | | P.M. | P.M. | P.M. |



## Jersey City to Port Jervis

WESTWARD — FIRST CLASS — TRAINS (Read Down)

| 311 | | 27 | | 159 | 235 | 63 | 117 | 313 |
|---|---|---|---|---|---|---|---|---|
| Saturday Only Except Holiday | | Daily | | Daily Except Saturday Sunday & Holiday | Saturday Only Except Holiday | Daily Except Sunday and Holiday | Daily Except Saturday | Daily Except Saturday Sunday & Holiday |
| P.M. | | P.M. | | P.M. | P.M. | P.M. | P.M. | P.M. |
| 3.20 | | 3.30 | | 3.50 | 3.50 | 4.00 | 4.00 | 4.20 |
| 3.33 | | 3.45 | | 4.05 | 4.05 | 4.14 | 4.17 | 4.40 |
| 3.38 | | 3.50 | | 4.10 | 4.10 | 4.19 | 4.22 | 4.45 |
| (Newark Branch.) | | | | | s 4.20 | | s 4.32 | (Newark Branch) |
| | | 4.00 | | 4.20 | 4.22 | 4.28 | 4.34 | |
| | | | | | s 4.24 | | s 4.36 | |
| | | | | | s 4.26 | | s 4.38 | |
| | | | | | s 4.28 | | s 4.40 | |
| | | (B.C.R.R.) | | s 4.25 | s 4.32 | (B.C.R.R.) | s 4.44 | |
| | | | | | | | | |
| | | | | s 4.28 | s 4.35 | | s 4.47 | |
| | | | | | s 4.38 | | s 4.50 | |
| 4.17 | | | | 4.32 | 4.41 | | 4.53 | 5.25 |
| s 4.19 | | | | s 4.38 | s 4.44 | | s 4.56 | s 5.27 |
| | | | | | s 4.46 | | s 4.58 | |
| | | | | | s 4.49 | | s 5.01 | |
| | | | | s 4.44 | s 4.53 | | s 5.05 | |
| | | 4.12 | | 4.46 | 4.55 | 4.40 | 5.07 | |
| | | s 4.14 | | s 4.49 | s 4.58 | s 4.42 | s 5.10 | |
| | | | | s 4.53 | s 5.02 | | s 5.14 | |
| | | 4.19 | | s 4.56 | s 5.05 | 4.47 | s 5.17 | |
| | | | | s 5.00 | | | s 5.21 | |
| | | | | s 5.05 | | | s 5.26 | |
| | | | | s 5.10 | | | s 5.30 | |
| | | 4.30 | | s 5.13 | | s 4.55 | s 5.33 | |
| | | | | | | | | |
| | | | | | | | | |
| | | | | | | s 5.00 | | |
| | | 4.39 | | | | s 5.04 | | |
| | | | | | | s 5.11 | | |
| | | | | | | s 5.15 | | |
| | | 4.49 | | | | 5.18 | | |
| | No. 27 Reduce speed to 35 miles per hour at Suffern to discharge U. S. Mail. Stop Ridgewood to receive passengers for Goshen west. | | | | No. 63 will not carry mail, baggage or express west of Suffern. | s 5.20 | | |
| | | | | | | s 5.25 | | |
| | | | | | | | | |
| | | 4.59 | | | | | | |
| | | | | | | s 5.34 | | |
| | | s 5.06 | | | | s 5.42 | | |
| | | | | | | s 5.47 | | |
| | | s 5.19 | | | | s 5.55 | | |
| | | | | | | | | |
| | | | | | | s 6.04 | Operate west of Waldwick Sundays. Will operate Dec 25, Jan 1 and Feb 12 | |
| | | | | | | s 6.11 | | |
| | | 5.43 | | | | 6.18 | | |
| | | 5.55 | | | | 6.30 | | |
| | | 6.00 | | | | | | |
| | | 6.05 | | | | | | |
| P.M. | | P.M. | | P.M. | P.M. | P.M. | P.M. | P.M. |

## Jersey City to Port Jervis

### WESTWARD — FIRST CLASS — TRAINS (Read Down)

| Distance from Jersey City | Distance between Stations | No. 36 STATIONS | 161 | 163 | 315 | 119 | |
|---|---|---|---|---|---|---|---|
| | | | Daily Except Sunday | Daily Except Saturday Sunday& Holiday | Daily Except Saturday Sunday& Holiday | Daily Except Saturday Sunday& Holiday | |
| | | | P.M. | P.M. | P.M. | P.M. | |
| .. | .. | NEW YORK Chambers St. (Ferry) L. | 4.40 | N.B. 4.50 | N.B. 4.50 | 5.00 | |
| .. | .. | JERSEY CITY L. N | 4.54 | 5.03 | 5.05 | 5.15 | |
| 2.2 | 2.2 | CROXTON N | 4.59 | 5.08 | 5.10 | 5.20 | |
| 8.5 | 6.3 | RUTHERFORD | s 5.10 | | (Newark Branch.) | s 5.30 | |
| 9.0 | 0.5 | RUTHERFORD JCT. N | 5.12 | 5.18 | | 5.32 | |
| 9.7 | 0.7 | CARLTON HILL | s 5.14 | | | | |
| 10.3 | 0.6 | PASSAIC PARK | s 5.16 | | | | |
| 11.0 | 0.7 | PROSPECT ST. | | | | | |
| 11.5 | 0.5 | PASSAIC | s 5.21 | (B.C.R.R.) | | s 5.37 | |
| 11.9 | 0.4 | HARRISON ST. | | | | | |
| 12.4 | 0.5 | CLIFTON | s 5.24 | | | s 5.41 | |
| 13.8 | 1.4 | LAKE VIEW | s 5.27 | | | | |
| 15.0 | 1.2 | XW TOWER N | 5.30 | | 5.47 | 5.45 | |
| 15.7 | 0.7 | PATERSON | s 5.32 | | s 5.50 | s 5.47 | |
| 16.7 | 1.0 | RIVER ST. | s 5.35 | | s 5.52 | s 5.49 | |
| 17.7 | 1.0 | HAWTHORNE | s 5.38 | | s 5.55 | s 5.51 | |
| 19.5 | 1.8 | GLEN ROCK | s 5.42 | | s 5.59 | s 5.55 | |
| 20.3 | 0.8 | RIDGEWOOD JCT. N | 5.44 | 5.34 | 6.00 | 5.57 | |
| 21.0 | 0.7 | RIDGEWOOD | s 5.47 | s 5.37 | s 6.03 | s 6.00 | |
| 22.2 | 1.2 | HOHOKUS | s 5.50 | s 5.41 | s 6.06 | s 6.03 | |
| 23.3 | 1.1 | WALDWICK N | s 5.54 | s 5.44 | s 6.10 | 6.06 | |
| 24.7 | 1.4 | ALLENDALE | s 5.58 | s 5.48 | | | |
| 26.6 | 1.9 | RAMSEY | s 6.03 | s 5.53 | | | |
| 29.2 | 2.6 | MAHWAH | s 6.07 | s 5.57 | | | |
| 30.6 | 1.4 | SUFFERN N | s 6.10 | s 6.01 | | | |
| 31.6 | 1.0 | HILLBURN | | | | | |
| 32.8 | 1.2 | RAMAPO | | | | | |
| 34.6 | 1.8 | SLOATSBURG | | | | | |
| 37.2 | 2.6 | TUXEDO | | | | | |
| 41.0 | 3.8 | SOUTHFIELDS | | | | | |
| 43.4 | 2.4 | ARDEN | | | | | |
| 45.0 | 1.6 | NEWBURGH JCT. N | | | | | |
| 46.0 | 1.0 | HARRIMAN | | | | | |
| 48.5 | 2.5 | MONROE | | | | | |
| 51.3 | 2.8 | OXFORD | | | | | |
| 53.5 | 2.2 | GREYCOURT D | | | | | |
| 54.3 | 0.8 | CHESTER | | | | | |
| 58.8 | 4.5 | GOSHEN N | | | | | |
| 62.7 | 3.9 | NEW HAMPTON | | | | | |
| 66.1 | 3.4 | MIDDLETOWN N | | | | | |
| 68.8 | 2.7 | HOWELLS JCT. | | | | | |
| 70.0 | 1.2 | HOWELLS | | | | | |
| 74.7 | 4.7 | OTISVILLE | | | | | |
| 79.7 | 5.0 | GRAHAM N | | | | | |
| 87.3 | 7.6 | PORT JERVIS A. L. N | | | | | |
| 89.8 | 2.5 | SPARROWBUSH N | | | | | |
| | | | P.M. | P.M. | P.M. | P.M. | |



## Jersey City to Port Jervis

### WESTWARD — FIRST CLASS — TRAINS (Read Down)

| 751 | 165 | 237 | 123 | 317 | 207 | 125 | 67 | 127 |
|---|---|---|---|---|---|---|---|---|
| Sunday and Holiday Only | Daily Except Saturday Sunday& Holiday | Saturday Only Except Holiday | Daily Except Saturday Sunday& Holiday | Daily Except Saturday Sunday& Holiday | Saturday and Holiday Only | Daily Except Saturday Sunday& Holiday | Daily Except Saturday Sunday& Holiday | Daily Except Saturday Sunday& Holiday |
| P.M. | P.M. | P.M. | P.M. | P.M. | P.M. | P.M. | P.M. | P.M. |
| N.B. 5.00 | N.B. 5.08 | N.B. 5.08 | N.B. 5.08 | N.B. 5.08 | N.B. 5.08 | N.B. 5.20 | N.B. 5.28 | N.B. 5.28 |
| 5.20 | 5.23 | 5.25 | 5.25 | 5.27 | 5.30 | 5.33 | 5.40 | 5.45 |
| 5.25 | 5.28 | 5.30 | 5.30 | 5.32 | 5.35 | 5.38 | 5.45 | 5.50 |
| s 5.35 | | | s 5.40 | (Newark Branch.) | s 5.45 | s 5.48 | | |
| 5.37 | 5.38 | 5.40 | 5.42 | | 5.47 | 5.50 | 5.56 | 6.00 |
| s 5.39 | | | | | s 5.49 | s 5.52 | | s 6.01 |
| s 5.41 | | | | | s 5.51 | s 5.55 | | s 6.03 |
| | | | | | s 5.53 | | (B.C.R.R.) Stop Arden and Oxford, discharge passengers. | s 6.06 |
| s 5.46 | (B.C.R.R.) | (B.C.R.R.) | (B.C.R.R.) | | s 5.56 | s 5.59 | | s 6.09 |
| | | | | | s 5.58 | | | s 6.11 |
| s 5.49 | | | | | s 6.01 | s 6.03 | | s 6.13 |
| s 5.52 | | | | | s 6.04 | s 6.07 | | s 6.16 |
| 5.56 | | | | 6.08 | 6.09 | 6.10 | | 6.18 |
| s 6.01 | | | | s 6.10 | s 6.12 | s 6.12 | | s 6.20 |
| s 6.04 | | | | | s 6.14 | | | s 6.22 |
| s 6.07 | | | | | s 6.17 | | | s 6.25 |
| s 6.11 | | | | | s 6.21 | | | s 6.29 |
| 6.13 | 5.51 | 5.59 | 6.02 | | 6.23 | | 6.08 | 6.31 |
| s 6.16 | s 5.54 | s 6.02 | Track 3 | | s 6.26 | | | s 6.33 |
| s 6.19 | s 5.57 | s 6.05 | | | s 6.29 | | s 6.11 | s 6.36 |
| s 6.22 | s 6.01 | s 6.08 | 6.07 | | s 6.34 | | 6.15 | s 6.40 |
| s 6.26 | s 6.06 | | | | s 6.38 | | | |
| s 6.31 | s 6.11 | | | | s 6.43 | | | |
| s 6.36 | s 6.16 | | | | s 6.48 | | s 6.25 | |
| s 6.40 | s 6.20 | | | | s 6.51 | | s 6.30 | |
| | | | | | s 6.53 | | s 6.33 | |
| | | | | | s 7.01 | | s 6.41 | |
| | | | | | s 7.07 | | s 6.47 | |
| | | | | | s 7.14 | | s 6.54 | |
| | | | | | * | | * | |
| | | | | | 7.22 | | 7.02 | |
| | | | | | s 7.24 | | s 7.04 | |
| | | | | | s 7.29 | | s 7.08 | |
| | | | | | * | | * | |
| | | | | | s 7.38 | | s 7.20 | |
| | | | | | s 7.45 | No. 207 stop Arden, Oxford, discharge passengers. | s 7.28 | |
| | | | | | s 7.56 | | s 7.39 | |
| Sundays arrive Suffern 6.48 P.M. | | | Will operate Oct. 12, Nov. 2. | Will operate Oct. 12, Nov. 2. | s 8.06 | | s 7.46 | |
| | | | | | s 8.13 | | s 7.54 | |
| | | | | | 8.21 | | 8.02 | |
| | | | | | 8.33 | | 8.15 | |
| P.M. | P.M. | P.M. | P.M. | P.M. | P.M. | P.M. | P.M. | P.M. |

## Jersey City to Port Jervis

WESTWARD — FIRST CLASS — TRAINS (Read Down)

| Distance from Jersey City | Distance between Stations | No. 36 STATIONS | 319 Daily Except Saturday Sunday & Holiday | 129 Daily Except Saturday Sunday & Holiday | 133 Daily Except Saturday Sunday & Holiday | | |
|---|---|---|---|---|---|---|---|
| | | | P.M. | P.M. | P.M. | | |
| | | NEW YORK | N.B. | N.B. | N.B. | | |
| .. | .. | Chambers St. (Ferry) ... L | 5.28 | 5.28 | 5.28 | | |
| .. | .. | JERSEY CITY ... L. N | 5.45 | 5.46 | 5.49 | | |
| 2.2 | 2.2 | CROXTON ... N | 5.50 | 5.51 | 5.54 | | |
| 8.5 | 6.3 | RUTHERFORD | (Newark Branch.) | | s 6.04 | | |
| 9.0 | 0.5 | RUTHERFORD JCT. N | | 6.01 | 6.06 | | |
| 9.7 | 0.7 | CARLTON HILL | | | | | |
| 10.3 | 0.6 | PASSAIC PARK | | | | | |
| 11.0 | 0.7 | PROSPECT ST. | | | | | |
| 11.5 | 0.5 | PASSAIC | | (B.C.R.R.) | (B.C.R.R.) | | |
| 11.9 | 0.4 | HARRISON ST. | | | | | |
| 12.4 | 0.5 | CLIFTON | | | | | |
| 13.8 | 1.4 | LAKE VIEW | | | | | |
| 15.0 | 1.2 | XW TOWER ... N | 6.34 | | | | |
| 15.7 | 0.7 | PATERSON | s 6.36 | | | | |
| 16.7 | 1.0 | RIVER ST. | s 6.38 | | | | |
| 17.7 | 1.0 | HAWTHORNE | s 6.41 | | | | |
| 19.5 | 1.8 | GLEN ROCK | s 6.45 | | | | |
| 20.3 | 0.8 | RIDGEWOOD JCT. ... N | 6.46 | 6.15 | 6.28 | | |
| 21.0 | 0.7 | RIDGEWOOD | s 6.49 | s 6.18 | | | |
| 22.2 | 1.2 | HOHOKUS | s 6.52 | | Track 3 | | |
| 23.3 | 1.1 | WALDWICK ... N | s 6.55 | s 6.25 | 6.33 | | |
| 24.7 | 1.4 | ALLENDALE | | s 6.29 | | | |
| 26.6 | 1.9 | RAMSEY | | s 6.34 | | | |
| 29.2 | 2.6 | MAHWAH | | | | | |
| 30.6 | 1.4 | SUFFERN ... N | | | | | |
| 31.6 | 1.0 | HILLBURN | | | | | |
| 32.8 | 1.2 | RAMAPO | | | | | |
| 34.6 | 1.8 | SLOATSBURG | | | | | |
| 37.2 | 2.6 | TUXEDO | | | | | |
| 41.0 | 3.8 | SOUTHFIELDS | | | | | |
| 43.4 | 2.4 | ARDEN | | | | | |
| 45.0 | 1.6 | NEWBURGH JCT. ... N | | | | | |
| 46.0 | 1.0 | HARRIMAN | | | | | |
| 48.5 | 2.5 | MONROE | | | | | |
| 51.3 | 2.8 | OXFORD | | | | | |
| 53.5 | 2.2 | GREYCOURT ... D | | | | | |
| 54.3 | 0.8 | CHESTER | | | | | |
| 58.8 | 4.5 | GOSHEN ... N | | | | | |
| 62.7 | 3.9 | NEW HAMPTON | | | | | |
| 66.1 | 3.4 | MIDDLETOWN ... N | | | | | |
| 68.8 | 2.7 | HOWELLS JCT. | | | | | |
| 70.0 | 1.2 | HOWELLS | | | | | |
| 74.7 | 4.7 | OTISVILLE | | | | | |
| 79.7 | 5.0 | GRAHAM ... N | | | | | |
| 87.3 | 7.6 | PORT JERVIS ... A. L. N | | | | | |
| 89.8 | 2.5 | SPARROWBUSH ... N | | | | | |
| | | | P.M. | P.M. | P.M. | | |



## Jersey City to Port Jervis

WESTWARD — FIRST CLASS — TRAINS (Read Down)

| 135 Daily Except Saturday Sunday & Holiday | 167 Daily Except Saturday Sunday & Holiday | 69 Daily Except Sunday | | 321 Daily Except Saturday Sunday & Holiday | 139 Daily Except Saturday | 71 Daily Except Holiday | 239 Saturday Only | |
|---|---|---|---|---|---|---|---|---|
| P.M. | P.M. | P.M. | | P.M. | P.M. | P.M. | P.M. | |
| N.B. | N.B. | N.B. | | N.B. | | | | |
| 5.48 | 5.48 | 6.00 | | 6.10 | 6.20 | 6.20 | 6.40 | |
| 6.02 | 6.07 | 6.13 | | 6.22 | 6.35 | 6.38 | 6.55 | |
| 6.07 | 6.12 | 6.18 | | 6.27 | 6.40 | 6.43 | 7.00 | |
| s 6.17 | | s 6.28 | | (Newark Branch.) | s 6.50 | | s 7.10 | |
| 6.19 | 6.21 | 6.30 | | | 6.52 | 6.53 | 7.12 | |
| s 6.21 | | s 6.32 | | | s 6.54 | | s 7.14 | |
| s 6.23 | | s 6.34 | | | s 6.56 | | s 7.16 | |
| s 6.25 | | s 6.36 | | | | | | |
| s 6.27 | (B.C.R.R.) | s 6.39 | | | s 7.00 | (B.C.R.R.) | s 7.20 | |
| s 6.30 | | s 6.42 | | | s 7.03 | | s 7.24 | |
| s 6.33 | | s 6.45 | | | s 7.06 | | s 7.27 | |
| 6.36 | | 6.48 | | 7.04 | 7.09 | | 7.30 | |
| s 6.39 | | s 6.50 | | s 7.07 | s 7.11 | | s 7.36 | |
| | | s 6.52 | | | | | s 7.39 | |
| | | s 6.55 | | | s 7.14 | | s 7.42 | |
| | | * | | | s 7.18 | | s 7.46 | |
| | 6.36 | 6.59 | | | 7.20 | 7.12 | 7.48 | |
| | s 6.39 | s 7.02 | | | s 7.22 | s 7.14 | s 7.51 | |
| | s 6.42 | * | | | s 7.25 | | s 7.54 | |
| | s 6.45 | s 7.06 | | | s 7.29 | 7.19 | s 7.57 | |
| | s 6.50 | s 7.11 | | | | s 7.22 | | |
| | s 6.55 | s 7.14 | | | | s 7.25 | | |
| | s 6.59 | s 7.18 | | | | s 7.30 | | |
| | s 7.01 | s 7.21 | | | | s 7.33 | | |
| | No. 69 stop Southfields and Arden, discharge passengers. Saturdays and Holidays stop Glen Rock and Hohokus. Will not carry baggage west of Suffern. Will operate west of Waldwick on Holidays. | s 7.26 | | | No. 71 stop Southfields and Arden, discharge passengers. Take connection from No. 69 at Ridgewood. Will not carry baggage west of Suffern. | s 7.38 | | |
| | | s 7.31 | | | | s 7.43 | | |
| | | * | | | | * | | |
| | | * | | | | * | | |
| | | 7.46 | | | | 7.58 | | |
| | | s 7.48 | | | | s 8.00 | | |
| | | s 7.53 | | | | s 8.05 | | |
| | | s 8.02 | | | | s 8.15 | | |
| | | s 8.11 | | | | s 8.24 | | |
| | | s 8.25 | | | | s 8.38 | | |
| | | | | Will operate Oct. 12, Nov. 2. | | | | |
| P.M. | P.M. | P.M. | | P.M. | P.M. | P.M. | P.M. | |

## Jersey City to Port Jervis

### WESTWARD — FIRST CLASS — TRAINS (Read Down)

| Distance from Jersey City | Distance between Stations | No. 36 STATIONS | 141 Daily Except Saturday and Sunday | 143 Daily Except Saturday | 171 Daily Except Sunday | 5 Daily | 145 Daily Except Saturday and Sunday |
|---|---|---|---|---|---|---|---|
| | | | P.M. | P.M. | P.M. | P.M. | P.M. |
| | | NEW YORK | | N.B. | N.B. | | N.B. |
| .. | .. | Chambers St. (Ferry) L. | 7.00 | 7.20 | 7.50 | 8.15 | 8.30 |
| .. | .. | JERSEY CITY ..... L. N | 7.15 | 7.35 | 8.05 | 8.30 | 8.45 |
| 2.2 | 2.2 | CROXTON ..... N | 7.20 | 7.40 | 8.10 | 8.35 | 8.50 |
| 8.5 | 6.3 | RUTHERFORD | s 7.30 | s 7.50 | s 8.20 | | s 9.00 |
| 9.0 | 0.5 | RUTHERFORD JCT. N | 7.32 | 7.52 | 8.22 | 8.44 | 9.02 |
| 9.7 | 0.7 | CARLTON HILL | s 7.34 | s 7.54 | s 8.24 | | s 9.04 |
| 10.3 | 0.6 | PASSAIC PARK | s 7.36 | s 7.56 | s 8.26 | | s 9.06 |
| 11.0 | 0.7 | PROSPECT ST. | | | | | |
| 11.5 | 0.5 | PASSAIC | s 7.40 | s 7.59 | s 8.29 | * 8.49 | s 9.10 |
| 11.9 | 0.4 | HARRISON ST. | | | | | |
| 12.4 | 0.5 | CLIFTON | s 7.44 | s 8.02 | s 8.32 | | s 9.13 |
| 13.8 | 1.4 | LAKE VIEW | s 7.47 | s 8.05 | s 8.35 | | s 9.16 |
| 15.0 | 1.2 | XW TOWER ..... N | 7.50 | 8.08 | 8.38 | 8.54 | 9.19 |
| 15.7 | 0.7 | PATERSON | s 7.56 | s 8.10 | s 8.40 | s 8.57 | s 9.21 |
| 16.7 | 1.0 | RIVER ST. | s 7.59 | s 8.12 | * | | |
| 17.7 | 1.0 | HAWTHORNE | s 8.02 | s 8.14 | s 8.43 | | s 9.25 |
| 19.5 | 1.8 | GLEN ROCK | s 8.06 | s 8.18 | s 8.47 | | s 9.29 |
| 20.3 | 0.8 | RIDGEWOOD JCT. ..... N | 8.08 | 8.20 | 8.48 | 9.04 | 9.31 |
| 21.0 | 0.7 | RIDGEWOOD | s 8.11 | s 8.22 | s 8.50 | s 9.06 | s 9.33 |
| 22.2 | 1.2 | HOHOKUS | s 8.14 | s 8.25 | s 8.53 | | * |
| 23.3 | 1.1 | WALDWICK ..... N | s 8.17 | s 8.28 | s 8.56 | 9.10 | s 9.38 |
| 24.7 | 1.4 | ALLENDALE | | s 8.31 | s 8.59 | | |
| 26.6 | 1.9 | RAMSEY | | s 8.36 | s 9.04 | | |
| 29.2 | 2.6 | MAHWAH | | s 8.41 | s 9.09 | | |
| 30.6 | 1.4 | SUFFERN ..... N | | s 8.44 | s 9.11 | 9.19 | No. 145 Stop Hohokus to discharge passengers. |
| 31.6 | 1.0 | HILLBURN | | | | | |
| 32.8 | 1.2 | RAMAPO | | | | | |
| 34.6 | 1.8 | SLOATSBURG | | | | | |
| 37.2 | 2.6 | TUXEDO | | | | 9.26 | |
| 41.0 | 3.8 | SOUTHFIELDS | | | | | |
| 43.4 | 2.4 | ARDEN | | | | | |
| 45.0 | 1.6 | NEWBURGH JCT. ..... N | | | | 9.34 | |
| 46.0 | 1.0 | HARRIMAN | | | | | |
| 48.5 | 2.5 | MONROE | | | | | |
| 51.3 | 2.8 | OXFORD | | | | | |
| 53.5 | 2.2 | GREYCOURT ..... D | | | | 9.43 | |
| 54.3 | 0.8 | CHESTER | | | | | |
| 58.8 | 4.5 | GOSHEN ..... N | | Sundays arrive Suffern, 8.50 P.M. | Stop River St. to discharge passengers. | * 9.49 | No. 5 stop Goshen and Middletown to discharge or take on passengers. Stop Passaic to receive passengers for Hornell west. |
| 62.7 | 3.9 | NEW HAMPTON | | | | | |
| 66.1 | 3.4 | MIDDLETOWN ..... N | | | | *10.00 | |
| 68.8 | 2.7 | HOWELLS JCT. | | | | | |
| 70.0 | 1.2 | HOWELLS | | | | | |
| 74.7 | 4.7 | OTISVILLE | | | | | |
| 79.7 | 5.0 | GRAHAM ..... N | | | | 10.21 | |
| 87.3 | 7.6 | PORT JERVIS ..... A. / L. N | | | | 10.33 / 10.43 | |
| 89.8 | 2.5 | SPARROWBUSH ..... N | | | | 10.48 | |
| | | | P.M. | P.M. | P.M. | P.M. | P.M. |



## Jersey City to Port Jervis

### WESTWARD — FIRST CLASS — TRAINS (Read Down)

| 707 Sunday Only | 259 Saturday Only | 173 Daily Except Saturday | 241 Saturday Only | 147 Daily Except Saturday | 175 Daily | | | |
|---|---|---|---|---|---|---|---|---|
| P.M. | P.M. | P.M. | P.M. | P.M. | P.M. | | | |
| N.B. 8.30 | 8.40 | 9.15 | 9.40 | 10.00 | N.B 11.00 | | | |
| 8.45 | 8.55 | 9.30 | 9.55 | 10.15 | 11.15 | | | |
| 8.50 | 9.00 | 9.35 | 10.00 | 10.20 | 11.20 | | | |
| s 9.00 | s 9.10 | s 9.45 | s10.10 | s10.30 | s11.31 | | | |
| 9.02 | 9.12 | 9.47 | 10.12 | 10.32 | 11.33 | | | |
| s 9.04 | s 9.14 | s 9.49 | s10.14 | s10.34 | s11.35 | | | |
| s 9.06 | s 9.16 | s 9.51 | s10.16 | s10.36 | s11.37 | | | |
| s 9.10 | s 9.20 | s 9.55 | s10.20 | s10.41 | s11.41 | | | |
| s 9.13 | s 9.23 | s 9.58 | s10.23 | s10.44 | s11.44 | | | |
| s 9.16 | s 9.26 | s10.01 | s10.26 | s10.47 | s11.47 | | | |
| 9.19 | 9.29 | 10.04 | 10.29 | 10.50 | 11.50 | | | |
| s 9.21 | s 9.31 | s10.06 | s10.31 | s10.55 | s11.52 | | | |
| | s 9.33 | s10.08 | s10.33 | | s11.54 | | | |
| s 9.25 | s 9.36 | s10.11 | s10.36 | s11.00 | s11.57 | | | |
| s 9.29 | s 9.40 | s10.15 | s10.40 | s11.04 | s12.01 | | | |
| 9.31 | 9.42 | 10.17 | 10.42 | 11.06 | 12.03 | | | |
| s 9.33 | s 9.45 | s10.20 | s10.45 | s11.09 | s12.06 | | | |
| * | s 9.48 | s10.23 | s10.48 | s11.12 | s12.09 | | | |
| s 9.38 | s 9.51 | s10.26 | s10.51 | s11.15 | s12.12 | | | |
| s 9.42 | s 9.55 | s10.30 | | s11.19 | s12.16 | | | |
| s 9.47 | s10.00 | s10.35 | | s11.24 | s12.21 | | | |
| | s10.05 | s10.40 | | s11.29 | s12.26 | | | |
| s 9.53 | s10.08 | s10.43 | | s11.32 | s12.29 | | | |
| s 9.59 | | | | | | | | |
| 10.13 | | | | | | | | |
| s10.15 | | | | | | | | |
| s10.20 | | | | | | | | |
| s10.29 | | | | | | | | |
| s10.37 | No. 707 stop Hohokus to discharge passengers. | Will not operate west of Waldwick on Sundays. | | Will operate west of Waldwick on Sundays. | | | | |
| s10.50 | | | | | | | | |
| s11.03 | | | | | Sundays arrive Suffern, 12.39 A.M. | | | |
| 11.10 | | | | | | | | |
| 11.23 | | | | | | | | |
| P.M. | P.M. | P.M. | P.M. | P.M. | A.M. | | | |

BERGEN COUNTY RAILROAD —

| Distance from Ridgewood Jct. | Distance between Stations | No. 36 STATIONS | 10 | 154 | | 50 | 112 |
|---|---|---|---|---|---|---|---|
| | | | Daily | Daily Except Sunday and Holiday | | Daily Except Saturday Sunday & Holiday | Daily Except Saturday Sunday & Holiday |
| | | | A.M. | A.M. | | A.M. | A.M. |
| 9.9 | 2.4 | RUTHERFORD JCT. N | 5.16 | 7.05 | ..... | 7.43 | 7.54 |
| 7.5 | 1.4 | GARFIELD | ..... | s 7.00 | ..... | ..... | s 7.48 |
| 6.1 | 1.1 | PLAUDERVILLE | ..... | s 6.57 | ..... | ..... | s 7.45 |
| 5.0 | 1.5 | COALBERG JCT. | 5.10 | 6.55 | ..... | 7.37 | 7.43 |
| 3.5 | 1.2 | BROADWAY—FAIR LAWN | ..... | s 6.53 | ..... | ..... | s 7.40 |
| 2.3 | 1.7 | RADBURN—FAIR LAWN | ..... | s 6.50 | ..... | s 7.32 | s 7.37 |
| 0.6 | 0.6 | GLEN ROCK | ..... | s 6.47 | ..... | s 7.29 | s 7.34 |
| .. | .. | RIDGEWOOD JCT. N | 5.04 | 6.45 | ..... | 7.27 | 7.32 |
| | | | A.M. | A.M. | | A.M. | A.M. |

BERGEN COUNTY RAILROAD —

| Distance from Rutherford Jct. | Distance between Stations | No. 36 STATIONS | 7 | | 205 | 233 | |
|---|---|---|---|---|---|---|---|
| | | | Daily | | Saturday Only Except Holiday | Saturday Only Except Holiday | |
| | | | A.M. | | P.M. | P.M. | |
| .. | .. | RUTHERFORD JCT. N | 12.45 | ..... | 1.06 | 1.16 | ..... |
| 2.4 | 2.4 | GARFIELD | ..... | ..... | ..... | s 1.20 | ..... |
| 3.8 | 1.4 | PLAUDERVILLE | ..... | ..... | ..... | ..... | ..... |
| 4.9 | 1.1 | COALBERG JCT. | 12.51 | ..... | 1.12 | 1.25 | ..... |
| 6.4 | 1.5 | BROADWAY—FAIR LAWN | ..... | ..... | ..... | s 1.28 | ..... |
| 7.6 | 1.2 | RADBURN—FAIR LAWN | ..... | ..... | ..... | s 1.30 | ..... |
| 9.3 | 1.7 | GLEN ROCK | ..... | ..... | ..... | s 1.33 | ..... |
| 9.9 | 0.6 | RIDGEWOOD JCT. N | 12.57 | ..... | 1.18 | 1.35 | ..... |
| | | | A.M. | | P.M. | P.M. | |

No. 156 Saturdays stop Garfield, 7.56 A.M.

No. 184 operates Oct. 12, Nov. 2, Feb. 12.

No. 204 Holidays stop Radburn—Fair Lawn, Broadway—Fair Lawn and Garfield.

Nos. 233 and 255 will operate Feb. 12.

No. 63 Saturday stop Glen Rock to discharge passengers.

No. 123 operates Oct. 12, Nov. 2.

When switching over Central Ave. crossing west of Rutherford Jct. on main or side tracks, member of crew must be stationed on crossing before switching movements are made to protect highway traffic.

To avoid eastbound freight trains on B.C.R.R. blocking highway crossings, there is a "Light" indicator located 600 feet west of Plank Road crossing west of Rutherford Jct. When yellow light is displayed it will indicate to enginemen of freight trains—Proceed to Rutherford Jct., being governed by interlocking signals at that point. Eastbound freight trains finding automatic signal 10–2–B at Approach, will stop west of Plank Road and communicate with BJ Tower by telephone, unless indicator displays "Yellow."



EASTWARD — FIRST CLASS — TRAINS (Read Up)

| 156 | 120 | 52 | 204 | 160 | 184 | 700 | 56 | 70 |
|---|---|---|---|---|---|---|---|---|
| Daily Except Sunday and Holiday | Daily Except Saturday Sunday & Holiday | Daily Except Saturday Sunday & Holiday | Saturday and Holiday Only | Daily Except Saturday Sunday & Holiday | Daily Except Sunday and Holiday | Sunday Only | Daily Except Sunday and Holiday | Sunday and Holiday Only |
| A.M. | A.M. | A.M. | A.M. | A.M. | A.M. | A.M. | A.M. | P.M. |
| 8.00 | 8.05 | 8.08 | 8.13 | 8.13 | 8.36 | 8.46 | 9.00 | 6.08 |
| * | ..... | ..... | * | ..... | s 8.32 | s 8.42 | ..... | s 6.03 |
| ..... | ..... | ..... | ..... | ..... | s 8.29 | ..... | ..... | ..... |
| 7.53 | 7.59 | 8.02 | 8.07 | 8.07 | 8.27 | 8.39 | 8.54 | 6.00 |
| s 7.51 | ..... | ..... | * | ..... | s 8.24 | ..... | ..... | ..... |
| s 7.48 | ..... | ..... | * | ..... | s 8.21 | s 8.35 | ..... | s 5.57 |
| s 7.44 | ..... | ..... | s 8.01 | s 8.02 | s 8.18 | s 8.32 | ..... | s 5.54 |
| 7.42 | 7.53 | 7.56 | 7.59 | 8.00 | 8.16 | 8.30 | 8.48 | 5.52 |
| A.M. | A.M. | A.M. | A.M. | A.M. | A.M. | A.M. | A.M. | P.M. |

WESTWARD — FIRST CLASS — TRAINS (Read Down)

| 255 | | 27 | 63 | 163 | 165 | 237 | 123 | 67 |
|---|---|---|---|---|---|---|---|---|
| Saturday Only Except Holiday | | Daily | Daily Except Sunday and Holiday | Daily Except Saturday Sunday & Holiday | Daily Except Saturday Sunday & Holiday | Saturday Only Except Holiday | Daily Except Saturday Sunday & Holiday | Daily Except Saturday Sunday & Holiday |
| P.M. | | P.M. | P.M. | P.M. | P.M. | P.M. | P.M. | P.M. |
| 2.02 | ..... | 4.00 | 4.28 | 5.18 | 5.38 | 5.40 | 5.42 | 5.56 |
| s 2.06 | ..... | ..... | ..... | ..... | ..... | s 5.44 | s 5.46 | ..... |
| s 2.09 | ..... | ..... | ..... | ..... | ..... | s 5.47 | s 5.49 | ..... |
| 2.11 | ..... | 4.06 | 4.34 | 5.24 | 5.43 | 5.49 | 5.51 | 6.02 |
| s 2.14 | ..... | ..... | ..... | s 5.26 | ..... | s 5.51 | s 5.53 | ..... |
| s 2.17 | ..... | ..... | ..... | s 5.29 | ..... | s 5.54 | s 5.57 | ..... |
| s 2.20 | ..... | ..... | * | s 5.32 | s 5.48 | s 5.57 | s 6.00 | ..... |
| 2.22 | ..... | 4.12 | 4.40 | 5.34 | 5.51 | 5.59 | 6.02 | 6.08 |
| P.M. | | P.M. | P.M. | P.M. | P.M. | P.M. | P.M. | P.M. |

Automatic Electric Crossing Gates located at Midland Avenue and Outwater Lane Crossing east of Plauderville Station.

These gates are regulated to operate according to speed of trains moving with current of traffic.

Eastbound trains operating under 30 miles per hour passing Market Street crossing will not exceed 30 miles per hour until crossings are reached.

Westbound trains operating under 30 miles per hour passing Monroe Street Gate Tower, Garfield, will not exceed 30 miles per hour until crossings are reached.

Crews performing switching at Castle's siding, west of Midland Avenue, Plauderville, and continuously occupy main track west of crossing, will pull west of sign reading "end of circuit," before making eastward movement to permit gates to lower. If main track is cleared during switching, cars will not be placed east of this sign until eastward movement is ready to be made.

Crews performing switching service at Garfield will not move cars west of Van Winkle Avenue on either main track.

BERGEN COUNTY RAILROAD —

| Distance from Ridgewood Jct. | Distance between Stations | No. 36 STATIONS | | | | 8 Daily P.M. | |
|---|---|---|---|---|---|---|---|
| 9.9 | 2.4 | RUTHERFORD JCT.N | | | | 10.50 | |
| 7.5 | 1.4 | GARFIELD | | | | | |
| 6.1 | 1.1 | PLAUDERVILLE | | | | | |
| 5.0 | 1.5 | COALBERG JCT. | | | | 10.45 | |
| 3.5 | 1.2 | BROADWAY—FAIR LAWN | | | | | |
| 2.3 | 1.7 | RADBURN—FAIR LAWN | | | | | |
| 0.6 | 0.6 | GLEN ROCK | | | | | |
| .. | .. | RIDGEWOOD JCT.N | | | | 10.40 | |
| | | | | | | P.M. | |

BERGEN COUNTY RAILROAD —

| Distance from Rutherford Jct. | Distance between Stations | No. 36 STATIONS | 129 Daily Except Saturday Sunday& Holiday P.M. | 133 Daily Except Saturday Sunday& Holiday P.M. | 167 Daily Except Saturday Sunday& Holiday P.M. | | 71 Daily Except Holiday P.M. |
|---|---|---|---|---|---|---|---|
| .. | .. | RUTHERFORD JCT.N | 6.01 | 6.06 | 6.21 | | 6.53 |
| 2.4 | 2.4 | GARFIELD | | s 6.10 | | | s 6.56 |
| 3.8 | 1.4 | PLAUDERVILLE | | s 6.13 | | | s 6.59 |
| 4.9 | 1.1 | COALBERG JCT. | 6.07 | 6.16 | 6.27 | | 7.01 |
| 6.4 | 1.5 | BROADWAY—FAIR LAWN | | s 6.19 | | | s 7.04 |
| 7.6 | 1.2 | RADBURN—FAIR LAWN | | s 6.23 | s 6.30 | | s 7.07 |
| 9.3 | 1.7 | GLEN ROCK | s 6.12 | | s 6.34 | | s 7.10 |
| 9.9 | 0.6 | RIDGEWOOD JCT.N | 6.15 | 6.28 | 6.36 | | 7.12 |
| | | | P.M. | P.M. | P.M. | | P.M. |

Crews performing switching service in Eastern Overall siding from Garfield will operate switch and remove derail before moving west of Van Winkle Avenue to prevent unnecessary operation of gates.

Crews switching in siding on eastbound tracks west of Plauderville will consume minimum of time on account of gates being lowered while eastbound track is occupied. Trains switching in this vicinity will approach these crossings prepared to stop if gates are not lowered and will proceed only after highway traffic has been stopped.

Switch leading from westbound B.C.R.R. main track to N.Y. S. & W. connection at Coalberg Jct. is equipped with automatic spring type switch. Trains operating from connection to B.C.R.R. must complete movement through switch before making reverse movement. Trains operating against current of traffic on westward track finding color light *distant switch signal* located between main tracks 7000 feet west of spring switch at Coalberg Jct. indicating green or clear will proceed; if distant switch signal indicates yellow or approach, trains will approach color light *switch signal* located between main tracks at spring switch prepared to stop. Trains operating against current of traffic on westward track finding color light switch signal located at the spring switch in green or clear position, will proceed over spring switch in accordance with special instructions; if switch signal is red or stop,



EASTWARD — FIRST CLASS — TRAINS (Read Up)

WESTWARD — FIRST CLASS — TRAINS (Read Down)

trains must stop and examine switch points, use hand-throw to correct alignment of switch if necessary and proceed only when switch is properly secured, reporting any improper condition immediately to Superintendent.

Engines heavier than B-5 are restricted over trestle in Hammerseley siding and in Kramer Coal Co. siding, Garfield.

Engines are restricted from operating in Grenard Mfg. Corp. and Bellet Coal Co. sidings, Garfield

Engines heavier than class B-5 are restricted from operating over Dundee Spur, including Passaic River Bridge.

Engines heavier than class B-5 are restricted from operating west of Dundee Island.

Over Bridge Dundee Spur 5 miles per hour.

Trains or engines will stop and member of crew protect highway traffic over Midland Ave. Crossing N. Y. S. W. R. R. interchange Passaic Junction.

Telephones connecting with Train Dispatchers circuit:

Wrights siding Saddle River
Crossover east of Garfield
Garfield at crossover west of Monroe St.
Signal 14-1-B Coalberg Jct.
General Motors siding west of Broadway-Fairlawn
Radburn-Fairlawn at crossover

## EASTWARD — FIRST CLASS — TRAINS (Read Up)

| Distance from XW Tower | Distance between Stations | No. 36 STATIONS | 300 Daily Except Saturday Sunday& Holiday A.M. | 302 Daily Except Sunday and Holiday A.M. | 304 Daily Except Saturday Sunday& Holiday A.M. | 306 Daily Except Sunday and Holiday A.M. | 308 Daily Except Sunday& Holiday A.M. |
|---|---|---|---|---|---|---|---|
| 18.9 | 2.2 | JERSEY CITY.....A. | 6.27 | N.B. 7.25 | N.B. 8.03 | N.B. 8.30 | 9.02 |
| 16.7 | 2.2 | CROXTON.....N | 6.22 | 7.20 | 7.58 | 8.25 | 8.57 |
| 14.5 | 2.9 | N. Y. & G. L. JCT.....N | 6.18 | 7.16 | 7.54 | 8.21 | 8.52 |
| 11.6 | 0.3 | HARRISON..... | s 6.14 | s 7.12 | s 7.50 | s 8.17 | s 8.48 |
| 11.3 | 0.6 | KEARNY..... | s 6.13 | f 7.10 | s 7.48 | s 8.15 | s 8.46 |
| 10.7 | 0.6 | NEWARK.....D (End of Single Track) | s 6.11 | s 7.08 | s 7.46 | s 8.13 | s 8.44 |
| 9.9 | 0.5 | RIVERSIDE..... | ..... | s 7.06 | s 7.43 | ..... | s 8.42 |
| 9.4 | 0.6 | WOODSIDE..... | ..... | ..... | s 7.41 | ..... | f 8.40 |
| 8.8 | 0.8 | CLEVELAND ST.....D | ..... | s 7.03 | s 7.39 | ..... | s 8.38 |
| 8.0 | 1.3 | BELLEVILLE.....D | s 6.07 | s 7.01 | s 7.37 | s 8.08 | s 8.36 |
| 6.7 | 0.6 | WALNUT ST..... | f 6.05 | s 6.58 | s 7.34 | s 8.05 | s 8.33 |
| 6.1 | 0.5 | NUTLEY ..... | s 6.03 | s 6.56 | s 7.31 | s 8.02 | s 8.30 |
| 5.6 | 1.4 | FRANKLIN AVE.....D | s 6.01 | s 6.54 | s 7.29 | s 8.00 | s 8.28 |
| 4.2 | 1.4 | ALLWOOD..... | s 5.59 | s 6.51 | s 7.26 | s 7.57 | s 8.25 |
| 2.8 | 2.4 | ATHENIA.....D | s 5.57 | s 6.48 | s 7.23 | s 7.54 | s 8.22 |
| 0.4 | 0.4 | SOUTH PATERSON.. | s 5.53 | s 6.43 | s 7.19 | s 7.49 | s 8.17 |
| .. | .. | XW TOWER.....N (End of Single Track) | 5.52 | 6.42 | 7.18 | 7.48 | 8.16 |
| | | | A.M. | A.M. | A.M. | A.M. | A.M. |

Single Track

## WESTWARD — FIRST CLASS — TRAINS (Read Down)

| Distance from Jersey City | Distance between Stations | No. 36 STATIONS | | 307 Saturday Only Except Holiday P.M. | 311 Saturday Only Except Holiday P.M. | 313 Daily Except Saturday Sunday& Holiday P.M. | |
|---|---|---|---|---|---|---|---|
| .. | .. | JERSEY CITY .....L. | ..... | N.B. 12.30 | 3.33 | 4.40 | ..... |
| 2.2 | 2.2 | CROXTON.....N | ..... | 12.35 | 3.38 | 4.45 | ..... |
| 4.4 | 2.2 | N. Y. & G. L. JCT.....N | ..... | 12.39 | 3.42 | 4.48 | ..... |
| 7.3 | 2.9 | HARRISON..... | ..... | f12.43 | s 3.46 | s 4.52 | ..... |
| 7.6 | 0.3 | KEARNY..... | ..... | f12.45 | s 3.48 | f 4.54 | ..... |
| 8.2 | 0.6 | NEWARK.....D (End of Single Track) | ..... | s12.48 | s 3.51 | s 4.57 | ..... |
| 9.0 | 0.6 | RIVERSIDE..... | ..... | ..... | f 3.53 | f 4.59 | ..... |
| 9.5 | 0.5 | WOODSIDE..... | ..... | s12.52 | s 3.55 | s 5.01 | ..... |
| 10.1 | 0.6 | CLEVELAND ST.....D | ..... | s12.54 | s 3.57 | s 5.03 | ..... |
| 10.9 | 0.8 | BELLEVILLE.....D | ..... | s12.56 | s 3.59 | s 5.05 | ..... |
| 12.2 | 1.3 | WALNUT ST..... | ..... | s12.59 | s 4.02 | s 5.08 | ..... |
| 12.8 | 0.6 | NUTLEY..... | ..... | s 1.01 | s 4.04 | s 5.10 | ..... |
| 13.3 | 0.5 | FRANKLIN AVE.....D | ..... | s 1.03 | s 4.06 | s 5.13 | ..... |
| 14.7 | 1.4 | ALLWOOD..... | ..... | s 1.07 | f 4.09 | f 5.16 | ..... |
| 16.1 | 1.4 | ATHENIA.....D | ..... | s 1.10 | s 4.12 | s 5.19 | ..... |
| 18.5 | 2.4 | SOUTH PATERSON.. | ..... | s 1.14 | s 4.16 | s 5.24 | ..... |
| 18.9 | 0.4 | XW TOWER.....N (End of Single Track) | ..... | 1.15 | 4.17 | 5.25 | ..... |
| | | | | P.M. | P.M. | P.M. | |

Single Track

No. 302 will operate Feb. 12.
No. 304 will operate Oct. 12, Nov. 2.
No. 308 will operate Oct. 12, Nov. 2, Feb. 12.



## EASTWARD — FIRST CLASS — TRAINS (Read Up)

| | 328 Daily Except Sunday and Holiday P.M. |
|---|---|
| | x |
| ..... | ..... |
| ..... | ..... |
| ..... | ..... |
| ..... | ..... |
| ..... | ..... |
| ..... | 7.30 |
| ..... | ..... |
| ..... | ..... |
| ..... | ..... |
| ..... | ..... |
| ..... | ..... |
| ..... | ..... |
| ..... | ..... |
| ..... | 7.20 |
| ..... | ..... |
| ..... | ..... |
| ..... | ..... |
| ..... | 7.10 |
| | P.M. |

Telephones connecting with Train Dispatchers circuit.
Gate Tower, Davis Ave., Harrison
Crossover, Kearny — Newark station, Athenia station, Newark Drawbridge cabin
Federal Creosoting Company siding, South Paterson
Sonneborn's Switch, east of Walnut St., Nutley

### SPEED RESTRICTIONS

| | Miles per hour |
|---|---|
| Passenger Trains: Between N. Y. & G. L. Jct. to east end first curve east of Harrison station | 50 |
| XW Tower to Harrison | 45 |
| Freight trains and trains hauling wrecking derrick | 25 |
| Trains hauling eight-wheel swivel truck cranes, steam shovels, and other similar pivoted machinery | 20 |
| Curve east D. L. & W. Bridge, east N. Y. & G. L. Jct. | 15 |
| Hackensack River Drawbridge | 25 |
| Class K–4B, K–5, K–5A and N Engines over Bridge 5.32 between N. Y. & G. L. Jct. and Kopper's Coke Plant | 15 |
| Bridge 7.96 Kearny to end of double track, both tracks | 20 |
| Through turnout at end of double track westbound | 10 |
| Class N–1–2–3, K–2A Engines over Bridge 13.02, Nutley | 20 |
| Verona Ave. Crossing east of Cleveland St. | 25 |

## WESTWARD — FIRST CLASS — TRAINS (Read Down)

| 315 Daily Except Saturday Sunday& Holiday P.M. | 317 Daily Except Saturday Sunday& Holiday P.M. | 319 Daily Except Saturday Sunday& Holiday P.M. | 321 Daily Except Saturday Sunday& Holiday P.M. |
|---|---|---|---|
| N.B. 5.05 | N.B. 5.27 | N.B. 5.45 | N.B. 6.22 |
| 5.10 | 5.32 | 5.50 | 6.27 |
| 5.13 | 5.36 | 5.54 | 6.30 |
| s 5.17 | s 5.39 | s 5.59 | s 6.34 |
| s 5.19 | f 5.40 | s 6.01 | s 6.35 |
| s 5.21 | s 5.42 | s 6.04 | s 6.37 |
| ..... | ..... | s 6.06 | s 6.39 |
| s 5.24 | ..... | s 6.08 | s 6.41 |
| s 5.26 | s 5.46 | s 6.10 | s 6.43 |
| s 5.28 | s 5.48 | s 6.13 | s 6.45 |
| s 5.31 | s 5.51 | s 6.16 | s 6.47 |
| s 5.33 | s 5.53 | s 6.18 | s 6.50 |
| s 5.35 | s 5.55 | s 6.20 | s 6.52 |
| s 5.38 | s 5.59 | s 6.24 | s 6.55 |
| s 5.41 | s 6.03 | s 6.28 | s 6.58 |
| s 5.45 | s 6.07 | s 6.32 | s 7.02 |
| 5.47 | 6.08 | 6.34 | 7.04 |
| P.M. | P.M. | P.M. | P.M. |

Eastbound trains are superior to westbound trains of same class, except Nos. 307, 311, 313, 315, 317, 319 and 321 are superior to No. 328.

HOURS DURING WHICH BLOCK STATIONS ARE IN OPERATION

NEWARK.—6.15 A.M.–10.15 P.M. Sunday closed.
CLEVELAND ST.—8.00 A.M.–5.00 P.M. Sunday and Holiday closed.
BELLEVILLE.—6.45 A.M.–7.15 P.M. Sunday and Holiday closed.
FRANKLIN AVE.—6.45 A.M.–7.15 P.M. Sunday and Holiday closed.
ATHENIA.—7.15 A.M.–11.00 A.M., 12.45 P.M.–5.00 P.M. Saturday 7.15 A.M.–11.00 A.M., 12.45 P.M.–4.15 P.M. Sunday and Holiday closed.

During hours Cleveland St., Belleville, Franklin Ave. and Athenia Block stations are closed, until time Newark Block station closes, Newark will block with XW Tower.

During hours Newark Block station is closed, New York and Greenwood Lake Junction will block with XW Tower.

No. 307 will operate Feb. 12.
No. 317 and 321 will operate Oct. 12, Nov. 2.

EASTWARD
Read Up

WESTWARD
Read Down

## No. 36

| Distance from Newburgh | | Single Track — STATIONS | Miles per Hour |
|---|---|---|---|
| 18.8 | .. | GREYCOURT ..... D | |
| 16.6 | .. | CRAIGVILLE | |
| 13.8 | .. | BLOOMING GROVE | |
| 12.1 | .. | WASHINGTONVILLE | |
| 9.4 | .. | SALISBURY MILLS | |
| 5.8 | .. | VAILS GATE | |
| 5.0 | .. | VAILS GATE JCT. | |
| 3.1 | .. | NEW WINDSOR | |
| 1.8 | .. | WEST NEWBURGH | |
| .. | .. | NEWBURGH | |

Westbound trains are superior to eastbound trains of same class.

Speed restrictions:
All trains ..... 25
Wrecking derrick and trains hauling eight-wheel swivel truck cranes, steam shovels and other similar pivoted machinery ..... 20
Class K-5, K-5A, N-3, N-3A engines over bridge 6.30 between Blooming Grove and Washingtonville ..... 15
Class K-2A, K-4B, N-1, N-2, N-3, N-3A, K-5A over bridge 9.01 ..... 20
Class C-3, C-3A, N-1, N-2, N-3, N-3A over bridge 11.15 ..... 20
Class K-5, K-5A, N-3, N-3A over bridge F. 12.34 ..... 20
Greycourt—Normal position of east leg of Wye will be for Wye Track.

Class R and S engines restricted Greycourt to Newburgh.

Class K and N engines are restricted from operating in West Newburgh yard over Nos. 5 and 6 leads.

Engines must not be operated on trestle, Coal Dock, Newburgh.

Trains will stop and flag over Washington St. crossing, Newburgh.

Trains and Engines will come to full stop, not less than 75 feet or more than 125 feet from, and not exceed 5 miles per hour over following crossings:

Temple Hill, west of Vails Gate Jct.

Blooming Grove Turnpike, east of Salisbury Mills;

Monroe Road, first crossing east of Washingtonville;

Chester Road, second crossing east of Washingtonville. No movements of cars will be made except when attached to engine.

Trains and engines will come to full stop not less than fifty (50) feet from State Road Crossing 2500 feet east of Vails Gate Jct. on Spur between Vails Gate Jct. and West Cornwall, send two members of crew ahead, flag traffic in both directions from both sides of track until entire movement is completed over crossing.

Telephones connecting with Train Dispatchers circuit:

Vails Gate Jct. station — Newburgh freight station (east end)
Washingtonville (west end of station)

## Graham Line

EASTWARD
Read Up

WESTWARD
Read Down

## No. 36

| Distance from Graham | Distance between Stations | STATIONS | | | |
|---|---|---|---|---|---|
| 42.3 | 2.8 | NEWBURGH JCT. ..... N | | | |
| 39.5 | 0.8 | CENTRAL VALLEY | | | |
| 38.7 | 6.1 | HIGHLAND MILLS | | | |
| 32.6 | 10.9 | BS TOWER ..... N | | | |
| 21.7 | 10.7 | MQ CROSSING ..... N | | | |
| 11.0 | 11.0 | HOWELLS JCT. | | | |
| .. | .. | GRAHAM ..... N | | | |



EASTWARD
Read Up

WESTWARD
Read Down

## No. 36

| Distance from Pine Bush | | STATIONS |
|---|---|---|
| .. | | MIDDLETOWN ..... N |
| 13.4 | | MIDDLETOWN MAIN ST. |
| 9.9 | Single Track | CRAWFORD JCT. |
| 8.2 | | CIRCLEVILLE |
| 5.8 | | BULLVILLE |
| 3.4 | | THOMPSON RIDGE |
| 1.5 | | VAN KEURENS |
| .. | | PINE BUSH |

Westbound trains are superior to eastbound trains of same class.

Speed restrictions: Miles per Hour
All trains ..... 25
Wrecking derrick ..... 10
Trains hauling eight-wheel swivel truck cranes, steam shovels and other similar pivoted machinery ..... 20
Class N-2 engines ..... 20
Class K-5, K-5A, N3, R and S engines are restricted from operating on this Branch.
Hand operated derail located on main track east end of Pine Bush station.
Trains over State Road Crossing, 150 feet east Pine Bush Station ..... 5
Trains over Crossing west of Bullville ..... 5
Trains over Crossing one mile east of Bullville ..... 10
Engines restricted on Sheffield Farms siding, Bullville.

## Pine Island Branch

EASTWARD
Read Up

WESTWARD
Read Down

## No. 36

| Distance from Goshen | | STATIONS |
|---|---|---|
| .. | Single Track | GOSHEN ..... N |
| 3.9 | | ORANGE FARM |
| 5.8 | | FLORIDA |
| 7.1 | | L. & N. E. SIDING |
| 8.4 | | BIG ISLAND |
| 11.4 | | PINE ISLAND JCT. |
| 11.9 | | PINE ISLAND |

Main track between Pine Island Junction and Pine Island will be under yard limit rules and blocked with cars.

L. & N. E. Siding between Florida and Big Island, Capacity 52 Cars.

Eastbound trains are superior to westbound trains of same class.

Speed restrictions: Miles per Hour
All trains ..... 35
East end Curve 5 M.P. 61.80 east of Orange Farm to east end Curve 9 M.P. 64.40 Florida ..... 25
East end Curve 9 M.P. 64.40 Florida to east end Curve 11 M.P. 67.60 west of Big Island ..... 20
East end Curve 11 M.P. 67.60 west of Big Island to Pine Island Jct. ..... 30
Through turnout to L. & N. E. R. R. at Pine Island Jct. ..... 15
Wrecking derrick ..... 10
Trains hauling eight-wheel swivel truck cranes, steam shovels and other similar pivoted machinery ..... 20
Pine Island Jct., junction of Pine Island Branch and L. & N. E. R. R.—Normal position switch L. & N. E. R. R.
Engines heavier than Class H restricted in W. J. Roe Siding, Florida, and sidings at Mt. Eve and Big Island.

## Montgomery Branch

EASTWARD
Read Up

WESTWARD
Read Down

## No. 36

| Distance from Goshen | | STATIONS |
|---|---|---|
| 10.2 | Single Track | MONTGOMERY |
| 8.8 | | BEAVER DAM |
| 8.2 | | NEELEY TOWN |
| 5.4 | | O. & W. CROSSING |
| 5.1 | | CAMPBELL HALL |
| 4.7 | | MQ CROSSING ..... N |
| 2.4 | | KIPPS |
| .. | | GOSHEN ..... N |

Class K and N engines restricted Brescia Mills Co. siding Montgomery.

Eastbound trains are superior to westbound trains of same class.

Speed restrictions: Miles per Hour
All trains Goshen to O. & W. Crossing ..... 35
O. & W. Crossing to Montgomery ..... 25
Through switches at G. P. Tower, Goshen ..... 15
Curve Goshen station ..... 5
Curve east of Goshen ..... 10
Church Street Crossing, Goshen, eastward ..... 5
westward ..... 15
M.P. 1.50 to M.P. 3.50 east and west of Kipps ..... 25
Wrecking Derrick and trains hauling eight-wheel swivel truck cranes, steam shovels and other similar pivoted machinery ..... 15
O. & W. Crossing ..... 10
Montgomery Branch to N.Y.N.H. & H.R.R. ..... 10
Trains from Montgomery Branch procure permission by telephone at O.&W. Crossing from operator MQ Crossing before proceeding.
Trains from N.Y. N.H. & H.R.R. procure permission from operator MQ Crossing before proceeding from Maybrook.
O. & W. Crossing, junction Montgomery Branch and N.Y.N.H. & H.R.R.—Normal position of switch N.Y.N.H. & H.R.R.

EASTWARD — FIRST CLASS — TRAINS (Read Up)

| Distance from Wanaque-Midvale | Distance between Stations | No. 36 STATIONS | 500 Daily Except Sunday | 502 Daily Except Sunday | 504 Daily Except Saturday and Sunday | 580 Saturday &Sunday Only | 506 Daily Except Saturday Sunday& Holiday |
|---|---|---|---|---|---|---|---|
| | | | A.M. | A.M. | A.M. | A.M. | A.M. |
| | | NEW YORK | N.B. | N.B. | N.B. | N.B. | N.B. |
| .. | .. | Chambers St. (Fy.)....A. | 5.54 | 6.54 | 7.27 | 7.44 | 7.54 |
| 31.3 | 2.2 | JERSEY CITY.....A. N | 5.43 | 6.36 | 7.15 | 7.30 | 7.40 |
| 29.1 | 2.2 | CROXTON.....N | 5.39 | 6.31 | 7.10 | 7.25 | 7.35 |
| 26.9 | 2.4 | N. Y. & G. L. JCT.....N | 5.36 | 6.28 | 7.06 | 7.21 | 7.31 |
| 24.5 | 0.7 | ARLINGTON..... | s 5.32 | s 6.24 | s 7.02 | s 7.17 | s 7.27 |
| 23.8 | 0.4 | WEST ARLINGTON..N | s 5.30 | s 6.22 | s 6.59 | s 7.14 | s 7.25 |
| 23.4 | 0.6 | NORTH NEWARK..... | s 5.28 | s 6.20 | s 6.57 | s 7.12 | s 7.23 |
| 22.8 | 0.9 | FOREST HILL..... | s 5.26 | s 6.18 | s 6.55 | s 7.10 | s 7.21 |
| 21.9 | 0.4 | BELWOOD PARK..... | s 5.24 | s 6.16 | s 6.53 | s 7.07 | ..... |
| 21.5 | 0.4 | ORCHARD ST.....D | s 5.22 | s 6.14 | s 6.51 | s 7.05 | s 7.18 |
| 21.1 | 0.7 | WALNUT ST.,(Bloomfield).. | s 5.20 | s 6.12 | s 6.49 | s 7.03 | s 7.16 |
| 20.4 | 1.0 | GLEN RIDGE..... | s 5.18 | s 6.10 | s 6.47 | s 7.01 | s 7.14 |
| 19.4 | 0.9 | MONTCLAIR.....D | s 5.16 | s 6.08 | s 6.45 | s 6.59 | s 7.12 |
| 18.5 | 0.9 | WATCHUNG AVE..... | s 5.14 | s 6.06 | s 6.43 | s 6.57 | s 7.10 |
| 17.6 | 0.5 | UPPER MONTCLAIRD | ..... | s 6.04 | s 6.41 | s 6.55 | s 7.08 |
| 17.1 | 0.6 | MOUNTAIN AVE..... | s 5.11 | s 6.02 | s 6.39 | s 6.53 | s 7.06 |
| 16.5 | 1.7 | MONTCLAIR HGTS. D | ..... | s 6.00 | s 6.37 | s 6.51 | s 7.04 |
| 14.8 | 2.1 | Single Track— GREAT NOTCH.....D | s 5.07 | s 5.58 | s 6.33 | s 6.47 | s 7.00 |
| 12.7 | 0.6 | LITTLE FALLS.....D | s 5.03 | s 5.54 | s 6.29 | s 6.42 | s 6.56 |
| 12.1 | 2.3 | SINGAC..... | s 5.01 | s 5.52 | s 6.27 | s 6.40 | s 6.54 |
| 9.8 | 0.9 | MOUNTAIN VIEW..... D.L. & W.R.R. Crossing | s 4.58 | s 5.49 | s 6.24 | s 6.37 | s 6.50 |
| 8.9 | 1.5 | WAYNE.....D | s 4.55 | s 5.46 | s 6.21 | s 6.34 | s 6.47 |
| 7.4 | 1.6 | PEQUANNOCK..... | s 4.52 | s 5.43 | s 6.18 | s 6.31 | s 6.44 |
| 5.8 | 1.4 | POMPTON PLAINS D | s 4.49 | s 5.40 | s 6.15 | s 6.28 | s 6.41 |
| 4.4 | 0.7 | RIVERDALE..... | ..... | ..... | ..... | ..... | ..... |
| 3.7 | 0.4 | POMPTON..... | s 4.46 | s 5.36 | s 6.12 | s 6.24 | s 6.37 |
| 3.3 | 1.8 | POMPTON JCT..... N.Y.S.& W.R.R. Crossing | ..... | ..... | ..... | ..... | ..... |
| 1.5 | 1.5 | HASKELL..... | ..... | s 5.31 | s 6.08 | s 6.19 | s 6.33 |
| .. | .. | WANAQUE-MIDVALED | s 4.40 | s 5.28 | s 6.05 | s 6.16 | s 6.30 |
| .. | .. | ..... | ..... | ..... | ..... | ..... | ..... |
| .. | .. | ..... | ..... | ..... | ..... | ..... | ..... |
| .. | .. | ..... | ..... | ..... | ..... | ..... | ..... |
| .. | .. | ..... | ..... | ..... | ..... | ..... | ..... |
| .. | .. | ..... | ..... | ..... | ..... | ..... | ..... |
| .. | .. | ..... | ..... | ..... | ..... | ..... | ..... |
| .. | .. | ..... | ..... | ..... | ..... | ..... | ..... |
| | | | A.M. | A.M. | A.M. | A.M. | A.M. |

Eastbound trains are superior to westbound trains of the same class, except:

No. 509 is superior to No. 522 to Pompton Plains, No. 522 take siding.

No. 513 is superior to No. 530 and 552.

No. 517 is superior to No. 554.

No. 535 is superior to No. 534.

No. 539 is superior to No. 536.

Class R and S engines are restricted on N. Y. & G. L. Ry.

Class N-3 engines are restricted on Wye at Great Notch.



EASTWARD — FIRST CLASS — TRAINS (Read Up)

| 404 Daily Except Saturday Sunday& Holiday | 508 Daily Except Sunday | 458 Daily Except Saturday Sunday& Holiday | 510 Daily Except Saturday Sunday& Holiday | 582 Saturday Only Except Holiday | 406 Daily Except Sunday and Holiday | 464 Daily Except Saturday Sunday& Holiday | 514 Daily Except Sunday | 408 Daily Except Saturday Sunday& Holiday |
|---|---|---|---|---|---|---|---|---|
| A.M. | A.M. | A.M. | A.M. | A.M. | A.M. | A.M. | A.M. | A.M. |
| N.B. | N.B. | N.B. | N.B. | N.B. | N.B. | N.B. | N.B. | |
| 8.04 | 8.26 | 8.26 | 8.32 | 8.32 | 8.43 | 8.49 | 9.03 | 9.27 |
| 7.52 | 8.06 | 8.13 | 8.20 | 8.20 | 8.27 | 8.35 | 8.50 | 9.10 |
| 7.47 | 8.01 | 8.08 | 8.15 | 8.15 | 8.22 | 8.30 | 8.45 | 9.05 |
| 7.43 | 7.57 | 8.04 | 8.12 | 8.12 | 8.19 | 8.26 | 8.41 | 9.01 |
| s 7.39 | s 7.53 | ..... | ..... | ..... | s 8.14 | ..... | s 8.38 | s 8.58 |
| s 7.36 | s 7.50 | ..... | ..... | ..... | s 8.12 | ..... | *..... | s 8.56 |
| s 7.34 | s 7.48 | ..... | s 8.07 | s 8.07 | s 8.10 | ..... | s 8.34 | s 8.54 |
| s 7.32 | s 7.46 | 7.58 | 8.06 | 8.05 | s 8.08 | 8.21 | s 8.32 | s 8.52 |
| ..... | s 7.44 | ..... | ..... | ..... | ..... | ..... | ..... | ..... |
| ..... | s 7.42 | ..... | s 8.02 | s 8.01 | ..... | ..... | s 8.29 | ..... |
| ..... | s 7.40 | ..... | ..... | ..... | ..... | ..... | s 8.27 | ..... |
| ..... | s 7.38 | s 7.55 | ..... | s 7.58 | ..... | s 8.17 | s 8.25 | ..... |
| ..... | s 7.35 | s 7.53 | ..... | s 7.56 | ..... | s 8.15 | s 8.23 | ..... |
| ..... | s 7.32 | s 7.50 | s 7.57 | s 7.54 | ..... | s 8.12 | s 8.21 | ..... |
| ..... | s 7.29 | s 7.47 | ..... | s 7.52 | ..... | s 8.09 | s 8.19 | ..... |
| ..... | s 7.27 | s 7.45 | ..... | s 7.50 | ..... | s 8.06 | s 8.17 | ..... |
| ..... | s 7.25 | s 7.43 | ..... | s 7.48 | ..... | s 8.04 | s 8.15 | ..... |
| ..... | s 7.21 | s 7.39 | s 7.50 | s 7.44 | ..... | 8.00 | s 8.11 | ..... |
| ..... | s 7.16 | ..... | s 7.44 | ..... | ..... | ..... | s 8.06 | ..... |
| ..... | s 7.14 | ..... | ..... | ..... | ..... | ..... | s 8.04 | ..... |
| ..... | s 7.10 | ..... | s 7.38 | ..... | ..... | ..... | s 8.00 | ..... |
| ..... | s 7.07 | ..... | s 7.35 | ..... | ..... | ..... | s 7.56 | ..... |
| ..... | s 7.04 | ..... | s 7.32 | ..... | ..... | ..... | s 7.53 | ..... |
| ..... | s 7.01 | ..... | s 7.29 | ..... | ..... | ..... | s 7.50 | ..... |
| ..... | ..... | ..... | ..... | ..... | ..... | ..... | f 7.46 | ..... |
| ..... | s 6.57 | ..... | s 7.25 | ..... | ..... | ..... | s 7.44 | ..... |
| ..... | ..... | ..... | ..... | ..... | ..... | ..... | ..... | ..... |
| ..... | s 6.53 | ..... | s 7.21 | ..... | ..... | ..... | s 7.40 | ..... |
| ..... | s 6.50 | ..... | s 7.18 | ..... | ..... | ..... | s 7.37 | ..... |
| ..... | ..... | ..... | ..... | ..... | ..... | ..... | ..... | ..... |
| ..... | ..... | ..... | ..... | ..... | ..... | ..... | ..... | ..... |
| ..... | ..... | ..... | ..... | ..... | ..... | ..... | ..... | ..... |
| ..... | ..... | ..... | ..... | ..... | Will operate Feb. 12. | ..... | Saturday and Holiday stop West Arlington. | ..... |
| ..... | ..... | ..... | ..... | ..... | ..... | ..... | ..... | ..... |
| ..... | ..... | ..... | ..... | ..... | ..... | ..... | ..... | ..... |
| ..... | ..... | ..... | ..... | ..... | ..... | ..... | ..... | ..... |
| A.M. | A.M. | A.M. | A.M. | A.M. | A.M. | A.M. | A.M. | A.M. |

Between hours 1.15 A.M.–5.15 A.M. trains and engines stop and flag over Forest St., Elm St. and Devon St. crossings, Arlington.

Between 6.00 A.M. and 9.00 A.M., westbound freight trains will clear eastbound passenger trains at Arlington 5 minutes. Between 7.50 A.M. and 8.00 A.M., westbound freight trains will not pass Arlington Station.

Cars being moved to or from long siding at Arlington must be handled by an engine to avoid cars moving beyond control.

When freight trains with Class N-1, N-2 or N-3 engines are double headed over Passaic River Bridge, West Arlington, no other engine will be permitted on draw span on the opposing track.

EASTWARD — FIRST CLASS — TRAINS (Read Up)

| Distance from Wanaque-Midvale | Distance between Stations | No. 36 STATIONS | 516 Daily Except Sunday | 550 Sunday Only | 518 Daily Except Sunday | 520 Daily Except Saturday Sunday & Holiday |
|---|---|---|---|---|---|---|
| | | | A.M. | A.M. | A.M. | A.M. |
| .. | .. | NEW YORK Chambers St. (Fy.)....A. | N. B. 9.27 | N.B. 10.24 | 10.44 | N. B. 11.44 |
| 31.3 | 2.2 | JERSEY CITY.....A. N | 9.15 | 10.10 | 10.27 | 11.32 |
| 29.1 | 2.2 | CROXTON.....N | 9.10 | 10.05 | 10.22 | 11.27 |
| 26.9 | 2.4 | N. Y. & G. L. JCT.....N | 9.06 | 10.01 | 10.18 | 11.23 |
| 24.5 | 0.7 | ARLINGTON..... | * | s 9.58 | s10.14 | s11.20 |
| 23.8 | 0.4 | WEST ARLINGTON..N | * | f 9.56 | f10.12 | s11.18 |
| 23.4 | 0.6 | NORTH NEWARK..... | s 8.59 | s 9.54 | s10.10 | s11.16 |
| 22.8 | 0.9 | FOREST HILL..... | * | s 9.52 | s10.08 | s11.14 |
| 21.9 | 0.4 | BELWOOD PARK..... | | | | |
| 21.5 | 0.4 | ORCHARD ST.....D | s 8.55 | s 9.49 | s10.05 | s11.11 |
| 21.1 | 0.7 | WALNUT ST., (Bloomfield).. | s 8.53 | s 9.47 | s10.03 | s11.09 |
| 20.4 | 1.0 | GLEN RIDGE..... | s 8.51 | s 9.45 | s10.01 | s11.07 |
| 19.4 | 0.9 | MONTCLAIR.....D | s 8.49 | s 9.43 | s 9.59 | s11.05 |
| 18.5 | 0.9 | WATCHUNG AVE..... | s 8.47 | s 9.41 | s 9.57 | s11.03 |
| 17.6 | 0.5 | UPPER MONTCLAIRD | s 8.45 | s 9.39 | s 9.55 | s11.01 |
| 17.1 | 0.6 | MOUNTAIN AVE..... | s 8.43 | s 9.37 | s 9.53 | s10.59 |
| 16.5 | 1.7 | MONTCLAIR HGTS. D | s 8.41 | f 9.35 | f 9.51 | s10.57 |
| 14.8 | 2.1 | GREAT NOTCH.....D | s 8.37 | s 9.30 | s 9.46 | s10.53 |
| 12.7 | 0.6 | LITTLE FALLS.....D | | s 9.25 | s 9.41 | |
| 12.1 | 2.3 | SINGAC..... | | f 9.23 | | |
| 9.8 | 0.9 | MOUNTAIN VIEW..... D.L. & W.R.R. Crossing | | s 9.20 | s 9.36 | |
| 8.9 | 1.5 | WAYNE.....D | | s 9.17 | s 9.33 | |
| 7.4 | 1.6 | PEQUANNOCK..... | | s 9.14 | s 9.30 | |
| 5.8 | 1.4 | POMPTON PLAINS D | | s 9.11 | s 9.27 | |
| 4.4 | 0.7 | RIVERDALE..... | | | | |
| 3.7 | 0.4 | POMPTON..... | | s 9.07 | s 9.22 | |
| 3.3 | 1.8 | POMPTON JCT..... N.Y.S. & W.R.R. Crossing | | | | |
| 1.5 | 1.5 | HASKELL..... | | s 9.03 | s 9.18 | |
| .. | .. | WANAQUE-MIDVALED | | s 9.00 | s 9.15 | |
| .. | .. | | Saturday and Holiday stop Forest Hill, West Arlington and Arlington. | | | |
| .. | .. | | | | | |
| .. | .. | | | | | |
| .. | .. | | | | | |
| .. | .. | | | | | |
| .. | .. | | | | | |
| .. | .. | | | | | |
| | | | A.M. | A.M. | A.M. | A.M. |

Single Track

Engines restricted on J. F. Post Trestle, North Newark.

City of Newark ordinance prohibits blocking of any street crossing within city limits for a period greater than three minutes. No running or flying switches will be made so that detached cars will pass over any street at grade after cars detached from engine or train.

Trains operating to and from Orange Branch at Forest Hill station will ring bell, and run not to exceed fifteen (15) miles per hour, look out carefully for passengers crossing tracks. Freight trains will not block off passenger trains at this point.

Between hours 1.15 A.M.–5.15 A.M. trains and engines stop and flag over Summer Ave. and Mt. Prospect Ave. between North Newark and Forest Hill.



EASTWARD — FIRST CLASS — TRAINS (Read Up)

| 522 Daily Except Sunday | 524 Sunday Only | 526 Daily Except Saturday and Sunday | 484 Sunday Only | 528 Daily Except Saturday and Sunday | 552 Sunday Only | 530 Daily Except Sunday | 532 Daily Except Saturday Sunday & Holiday | 554 Sunday Only |
|---|---|---|---|---|---|---|---|---|
| P.M. | P.M. | P.M. | P.M. | P.M. | P.M. | P.M. | P.M. | P.M. |
| 1.44 | 2.39 | 3.24 | 4.39 | 6.04 | N.B. 6.24 | 6.34 | N. B. 7.27 | N. B. 7.54 |
| 1.32 | 2.27 | 3.10 | 4.27 | 5.43 | 6.08 | 6.16 | 7.11 | 7.32 |
| 1.27 | 2.22 | 3.06 | 4.22 | 5.38 | 6.03 | 6.11 | 7.06 | 7.27 |
| 1.23 | 2.18 | 3.02 | 4.18 | 5.34 | 5.59 | 6.07 | 7.02 | 7.23 |
| s 1.20 | s 2.15 | s 2.59 | s 4.15 | s 5.29 | s 5.55 | s 6.03 | s 6.59 | s 7.20 |
| s 1.18 | | f 2.57 | * | s 5.27 | s 5.52 | s 6.00 | f 6.57 | f 7.18 |
| s 1.16 | s 2.12 | s 2.55 | s 4.13 | s 5.25 | s 5.50 | s 5.58 | s 6.55 | s 7.16 |
| s 1.14 | s 2.10 | s 2.53 | s 4.11 | s 5.23 | s 5.48 | s 5.54 | s 6.53 | s 7.14 |
| | | f 2.51 | | | | | | f 7.12 |
| s 1.10 | s 2.08 | s 2.49 | s 4.09 | s 5.19 | s 5.45 | s 5.49 | | s 7.10 |
| s 1.08 | s 2.06 | s 2.47 | s 4.07 | s 5.17 | s 5.43 | s 5.47 | s 6.48 | s 7.08 |
| s 1.06 | s 2.04 | s 2.45 | s 4.05 | s 5.15 | s 5.41 | s 5.45 | s 6.46 | s 7.06 |
| s 1.04 | s 2.02 | s 2.43 | s 4.03 | s 5.12 | s 5.39 | s 5.42 | s 6.44 | s 7.04 |
| s 1.02 | s 2.00 | s 2.41 | s 4.01 | s 5.10 | s 5.37 | s 5.39 | s 6.42 | s 7.02 |
| s 1.00 | s 1.58 | s 2.39 | s 3.59 | s 5.08 | s 5.35 | s 5.36 | s 6.40 | s 7.00 |
| s12.58 | s 1.56 | s 2.37 | s 3.57 | s 5.06 | s 5.33 | s 5.33 | | s 6.58 |
| s12.56 | s 1.54 | s 2.35 | s 3.55 | s 5.04 | s 5.31 | s 5.31 | s 6.37 | s 6.56 |
| s12.52 | s 1.50 | s 2.30 | s 3.51 | s 5.00 | s 5.26 | s 5.26 | s 6.33 | s 6.52 |
| s12.47 | s 1.45 | s 2.25 | s 3.47 | | s 5.21 | s 5.21 | | s 6.47 |
| | s 1.42 | | f 3.44 | | | | | f 6.45 |
| s12.43 | s 1.39 | s 2.20 | s 3.42 | | s 5.15 | s 5.15 | | s 6.42 |
| s12.40 | s 1.36 | f 2.17 | s 3.39 | | s 5.12 | s 5.12 | | s 6.39 |
| s12.37 | s 1.33 | s 2.15 | s 3.36 | | s 5.09 | s 5.09 | | s 6.36 |
| s12.34 | s 1.30 | s 2.12 | s 3.33 | | s 5.06 | s 5.06 | | s 6.33 |
| s12.27 | s 1.26 | s 2.07 | s 3.29 | | s 5.02 | s 5.02 | | s 6.29 |
| s12.23 | s 1.23 | f 2.03 | s 3.25 | | s 4.58 | s 4.58 | | s 6.24 |
| s12.20 | s 1.20 | s 2.00 | s 3.22 | | s 4.55 | s 4.55 | | s 6.21 |
| | | Will operate Dec. 25 and Jan. 1. | Stop West Arlington to discharge passengers. | Will not operate Oct. 12, Feb. 22. Will operate Dec. 25 and Jan 1. | | | | |
| P.M. | P.M. | P.M. | P.M. | P.M. | P.M. | P.M. | P.M. | P.M. |

Glen Ridge will be operated as block office for trains 523 and 525 only.

No. 525 will not pass Glen Ridge without clearance Form A.

Automatic Cut-out and Cut-in device at Normal Ave. crossing Montclair Heights, controls located at southeast corner of crossing. Trains performing switching movements within the circuit limits of this crossing will operate this device and member of crew protect crossing. Cut-in buttons must be restored when switching is completed.

EASTWARD — FIRST CLASS — TRAINS (Read Up)

| Distance from Wanaque-Midvale | Distance between Stations | No. 36 STATIONS | | | 534 Daily | | 536 Daily | 538 Daily Except Sunday |
|---|---|---|---|---|---|---|---|---|
| | | | | | P.M. | | P.M. | P.M. |
| | | NEW YORK | | | | | N. B. | N. B. |
| .. | .. | Chambers St. (Fy.)....A. | | | 9.54 | | 11.24 | 11.49 |
| 31.3 | 2.2 | JERSEY CITY.....A. N | | | 9.42 | | 11.12 | 11.37 |
| 29.1 | 2.2 | CROXTON.....N | | | 9.37 | | 11.07 | 11.32 |
| 26.9 | 2.4 | N. Y. & G. L. JCT.....N | | | 9.33 | | 11.03 | 11.28 |
| 24.5 | 0.7 | ARLINGTON..... | | | s 9.23 | | s10.59 | s11.24 |
| 23.8 | 0.4 | WEST ARLINGTON..N | | | * | | | * |
| 23.4 | 0.6 | NORTH NEWARK..... | | | s 9.18 | | s10.55 | s11.21 |
| 22.8 | 0.9 | FOREST HILL..... | | | * | | | s11.19 |
| 21.9 | 0.4 | BELWOOD PARK..... | | | | | H | s11.17 |
| 21.5 | 0.4 | ORCHARD ST.....D | | | s 9.16 | | s10.47 | |
| 21.1 | 0.7 | WALNUT ST., (Bloomfield).. | | | s 9.14 | | s10.45 | |
| 20.4 | 1.0 | GLEN RIDGE..... | | | s 9.12 | | s10.43 | s11.14 |
| 19.4 | 0.9 | MONTCLAIR.....D | | | s 9.10 | | s10.41 | s11.12 |
| 18.5 | 0.9 | WATCHUNG AVE..... | | | s 9.08 | | s10.39 | s11.10 |
| 17.6 | 0.5 | UPPER MONTCLAIRD | | | s 9.06 | | s10.37 | s11.08 |
| 17.1 | 0.6 | MOUNTAIN AVE..... | | | | | * | |
| 16.5 | 1.7 | MONTCLAIR HGTS. D | | | | | s10.34 | s11.06 |
| 14.8 | 2.1 | GREAT NOTCH.....D | | | s 9.02 | | s10.32 | s11.03 |
| 12.7 | 0.6 | LITTLE FALLS.....D | | | s 8.57 | | s10.28 | |
| 12.1 | 2.3 | SINGAC..... | | | | | | |
| 9.8 | 0.9 | MOUNTAIN VIEW.... D.L. & W.R.R. Crossing | | | s 8.53 | | s10.24 | |
| 8.9 | 1.5 | WAYNE.....D | | | s 8.49 | | * | |
| 7.4 | 1.6 | PEQUANNOCK..... | | | s 8.46 | | s10.21 | |
| 5.8 | 1.4 | POMPTON PLAINS D | | | f 8.44 | | s10.19 | |
| 4.4 | 0.7 | RIVERDALE..... | | | | | | |
| 3.7 | 0.4 | POMPTON..... | | | s 8.41 | | s10.16 | |
| 3.3 | 1.8 | POMPTON JCT..... N.Y.S. & W.R.R. Crossing | | | | | | |
| 1.5 | 1.5 | HASKELL..... | | | s 8.38 | | s10.18 | |
| .. | .. | WANAQUE-MIDVALE D | | | s 8.35 | | s10.10 | |
| | | | | | P.M. | | P.M. | P.M. |

Single Track

No. 534 stop West Arlington discharge passengers. Sundays, stop Forest Hill to discharge passengers. Will not carry baggage on Sundays.

No. 536 Sun. and Hol. stop Wayne 10.23 P.M. Sunday stop Mountain Ave., to discharge passengers. Holidays stop Belwood Park.

Stop West Arlington to discharge passengers.

Remote Control Switches (see General Instructions, page 4) are located at Forest Hill and controlled from "WR" Tower, West Arlington, as follows:

Main track crossover

Orange Branch connection to eastward main track

Crossover from Orange Branch to South Canal Siding

Westbound manual block signals on Orange Branch and Main Line will be controlled from "WR" Tower. When switching movements are to be made over interlocking switches at Forest Hill, an understanding must be had with Operator at "WR" and all movements made upon signal indication.

When a train is delayed after a proceed signal has been displayed for it the operator must be notified promptly as to the cause and probable duration of delay.

A white light known as "Maintainers' Call Signal" is located on the instrument housing case at interlocking home signals and on main instrument case at Forest Hill. Train crews working in vicinity observing this signal will immediately call Operator at "WR" on telephone as this signal will be used to call train employes to telephone.



EASTWARD — FIRST CLASS — TRAINS

SPECIAL INSTRUCTIONS — Governing hand thrown switches, spring switches (see General Instructions, page 4) and signals at Great Notch.

Crossover located 200 feet west of station leading from westward main track to Caldwell Branch is equipped with hand operated switch stand and electric lock, normal position for main track. West end equipped with spring type switch stand, normal position for eastbound movement.

Second crossover located 500 feet west of station is equipped with spring type switch stands: Normal position west end for crossover movement, east end for Caldwell Branch.

Color light signals governing movements over and through these crossovers are controlled by Operator, Great Notch station during hours the station is in operation. During hours station is closed signals will operate automatically.

Hand-thrown crossover switch for movement of westbound trains to Caldwell Branch will be handled by Operator during hours station is in operation. During hours station is closed switch will be handled by train crews for movement to Caldwell Branch.

Switch will be unlocked as follows: Press down the upper latch and remove switch padlock then insert a switch key in the switch key circuit controller located at the switch and turning key as far as it will go to the right holding it there for five (5) seconds and after a four (4) minute interval the indicator will clear and the switch may be operated in the usual manner and the movement made on signal indication.

When irregular movements require hand operation of crossover switches while operators are on duty, a thorough understanding must be had with the operator and all train movements made on signal indication.

During the hours station is closed the signals governing movement over the crossover will clear for normal operation upon approach of a train and the following instructions will govern: In event the signals fail to clear and no train is observed to be approaching on a conflicting route or to be using the crossovers, a member of the crew should examine the switches and operate spring switches by hand to their normal position to determine that they are properly positioned. If signal does not then clear for the movement, the switch key controller located adjacent to the signal governing the move to be made should be operated and the signal should then clear after a four (4) minute interval.

In the event a train is stopped after signal has been displayed for the movement and for some reason is unable to proceed, the signal may be restored to stop for movement of another train by operating a push button located at side of key controller at the signal.

Westward movements from the eastward main track may be made upon signal indication after key controller located at the dwarf signal governing this movement has been operated.

Switching movements during the period the office is closed should be made after determining that all signals are set at stop, switches properly lined for the movement and necessary flag protection provided and movements made upon signal indication.

Telephones located at westward manual block signals, and at westward and eastward home signals will connect with Great Notch station when operators on duty and with "WR", West Arlington, during the period "GA" Office is closed.

WESTWARD — FIRST CLASS — TRAINS (Read Down)

| Distance from Jersey City | Distance between Stations | No. 36 STATIONS | 501 | 503 | 483 | 505 | 507 |
|---|---|---|---|---|---|---|---|
| | | | Daily | Daily Except Sunday | Daily Except Saturday Sunday & Holiday | Sunday Only | Daily Except Sunday |
| | | | A.M. | A.M. | A.M. | A.M. | A.M. |
| | | NEW YORK | N.B. | | N.B. | | |
| .. | .. | Chambers St. (Fy.) L. | 12.30 | 6.45 | 7.30 | 8.30 | 9.15 |
| .. | .. | JERSEY CITY.....L.N | 12.50 | 7.03 | 7.51 | 8.58 | 9.30 |
| 2.2 | 2.2 | CROXTON.....N | 12.55 | 7.08 | 7.55 | 9.03 | 9.35 |
| 4.4 | 2.2 | N. Y. & G. L. JCT.....N | 1.00 | 7.12 | 7.59 | 9.07 | 9.39 |
| 6.8 | 2.4 | ARLINGTON..... | s 1.04 | s 7.17 | s 8.02 | s 9.10 | s 9.42 |
| 7.5 | 0.7 | WEST ARLINGTON..N | * | f 7.19 | | f 9.12 | f 9.44 |
| 7.9 | 0.4 | NORTH NEWARK..... | s 1.08 | s 7.21 | s 8.06 | s 9.14 | s 9.46 |
| 8.5 | 0.6 | FOREST HILL..... | s 1.10 | s 7.23 | s 8.10 | s 9.16 | s 9.48 |
| 9.4 | 0.9 | BELWOOD PARK..... | s 1.12 | f 7.25 | | f 9.18 | |
| 9.8 | 0.4 | ORCHARD ST.....D | s 1.14 | s 7.28 | | f 9.20 | s 9.51 |
| 10.2 | 0.4 | WALNUT ST.,(Bloomfield).. | s 1.16 | s 7.32 | | s 9.22 | s 9.53 |
| 10.9 | 0.7 | GLEN RIDGE..... | s 1.18 | s 7.36 | | s 9.24 | s 9.56 |
| 11.9 | 1.0 | MONTCLAIR.....D | s 1.21 | s 7.39 | | s 9.26 | s 9.59 |
| 12.8 | 0.9 | WATCHUNG AVE..... | s 1.23 | s 7.41 | | s 9.28 | s10.01 |
| 13.7 | 0.9 | UPPER MONTCLAIRD | s 1.26 | s 7.45 | | s 9.30 | s10.03 |
| 14.2 | 0.5 | MOUNTAIN AVE..... | s 1.28 | f 7.47 | | s 9.32 | *..... |
| 14.8 | 0.6 | MONTCLAIR HGTS. D | s 1.30 | s 7.49 | | f 9.34 | f10.06 |
| 16.5 | 1.7 | GREAT NOTCH.....D | s 1.34 | s 7.54 | | f 9.38 | s10.10 |
| 18.6 | 2.1 | LITTLE FALLS.....D | s 1.39 | s 8.11 | | s 9.43 | s10.15 |
| 19.2 | 0.6 | SINGAC..... | *..... | | | f 9.45 | f10.17 |
| 21.5 | 2.3 | MOUNTAIN VIEW.... D.L. & W.R.R. Crossing | s 1.43 | s 8.15 | | s 9.48 | s10.21 |
| 22.4 | 0.9 | WAYNE.....D | s 1.46 | s 8.18 | | s 9.51 | s10.24 |
| 23.9 | 1.5 | PEQUANNOCK..... | s 1.49 | s 8.21 | | s 9.54 | s10.27 |
| 25.5 | 1.6 | POMPTON PLAINS D | s 1.52 | s 8.24 | | s 9.57 | s10.30 |
| 26.9 | 1.4 | RIVERDALE..... | | | | | |
| 27.6 | 0.7 | POMPTON..... | s 1.56 | s 8.29 | | s10.01 | s10.34 |
| 28.0 | 0.4 | POMPTON JCT..... N.Y.S. & W.R.R. Crossing | | | | | |
| 29.8 | 1.8 | HASKELL..... | s 2.00 | s 8.34 | | s10.05 | *..... |
| 31.3 | 1.5 | WANAQUE-MIDVALE D | s 2.03 | s 8.37 | | s10.09 | s10.40 |
| .. | .. | | Stop West Arlington, Singac, to discharge passengers | | | | Stop Mountain Ave. and Haskell to discharge passengers. |
| | | | A.M. | A.M. | A.M. | A.M. | A.M. |

Single Track

Locomotives restricted on Andrew Jergen Co. coal trestle east of Belwood Park.

Eastbound trains stopping at Watchung Ave., Montclair, stop with rear car east of Valley Road Bridge.

Westbound train will not pull into Watchung Ave. station when eastbound train is at station.

Trains operating through siding at Little Falls must flag over Lindsley road crossing.

When meeting at Little Falls, trains must not exceed 5 miles per hour over Center St. and Steven's Ave. crossings on account of automatic flasher signals interlocked.

Automatic electric crossing gates are in service at Boonton Road, Mountainview: Westbound circuit starts 1600 feet east of Boonton Road crossing and eastbound circuit 1750 feet west of Boonton



WESTWARD — FIRST CLASS — TRAINS (Read Down)

| | 495 | 509 | | | 579 | 511 | | 583 |
|---|---|---|---|---|---|---|---|---|
| | Daily Except Saturday Sunday & Holiday | Daily Except Saturday | | | Saturday Only Except Holiday | Daily Except Saturday Sunday & Holiday | | Saturday Only Except Holiday |
| | A.M. | A.M. | | | P.M. | P.M. | | P.M. |
| | | | | | N.B. | | | N.B. |
| ..... | 9.50 | 11.10 | ..... | ..... | 1.00 | 1.10 | ..... | 1.20 |
| ..... | 10.05 | 11.30 | ..... | ..... | 1.15 | 1.30 | ..... | 1.37 |
| ..... | 10.10 | 11.35 | ..... | ..... | 1.20 | 1.35 | ..... | 1.42 |
| ..... | 10.14 | 11.39 | ..... | ..... | 1.24 | 1.39 | ..... | 1.46 |
| ..... | s10.17 | s11.42 | ..... | ..... | s 1.27 | s 1.43 | ..... | s 1.50 |
| ..... | ..... | f11.44 | ..... | ..... | s 1.29 | s 1.45 | ..... | s 1.52 |
| ..... | s10.20 | s11.46 | ..... | ..... | s 1.31 | s 1.47 | ..... | s 1.54 |
| ..... | ..... | s11.48 | ..... | ..... | s 1.33 | s 1.49 | ..... | s 1.56 |
| ..... | ..... | f11.50 | ..... | ..... | s 1.35 | ..... | ..... | s 1.58 |
| ..... | f10.23 | s11.52 | ..... | ..... | s 1.37 | s 1.52 | ..... | s 2.00 |
| ..... | f10.25 | *..... | ..... | ..... | s 1.39 | s 1.54 | ..... | s 2.02 |
| ..... | f10.27 | ..... | ..... | ..... | s 1.41 | s 1.56 | ..... | s 2.05 |
| ..... | s10.30 | s11.59 | ..... | ..... | s 1.44 | s 1.59 | ..... | s 2.08 |
| ..... | f10.32 | s12.02 | ..... | ..... | s 1.46 | s 2.01 | ..... | s 2.11 |
| ..... | f10.34 | s12.05 | ..... | ..... | s 1.48 | s 2.03 | ..... | s 2.13 |
| ..... | ..... | f12.07 | ..... | ..... | s 1.51 | *..... | ..... | s 2.16 |
| ..... | f10.37 | f12.09 | ..... | ..... | s 1.53 | *..... | ..... | s 2.18 |
| ..... | s10.41 | s12.11 | ..... | ..... | s 1.56 | s 2.08 | ..... | s 2.23 |
| ..... | ..... | s12.16 | ..... | ..... | s 2.00 | ..... | ..... | ..... |
| ..... | ..... | ..... | ..... | ..... | s 2.02 | ..... | ..... | ..... |
| ..... | ..... | s12.21 | ..... | ..... | s 2.05 | ..... | ..... | ..... |
| ..... | ..... | s12.24 | ..... | ..... | s 2.08 | ..... | ..... | ..... |
| ..... | ..... | s12.27 | ..... | ..... | s 2.11 | ..... | ..... | ..... |
| ..... | ..... | s12.30 | ..... | ..... | s 2.15 | ..... | ..... | ..... |
| ..... | ..... | ..... | ..... | ..... | ..... | ..... | ..... | ..... |
| ..... | ..... | s12.36 | ..... | ..... | s 2.19 | ..... | ..... | ..... |
| ..... | ..... | ..... | ..... | ..... | ..... | ..... | ..... | ..... |
| ..... | ..... | s12.41 | ..... | ..... | s 2.23 | ..... | ..... | ..... |
| ..... | ..... | s12.45 | ..... | ..... | s 2.27 | ..... | ..... | ..... |
| ..... | ..... | Will operate Dec. 25 and Jan. 1. Stop Walnut St. discharge passengers. | ..... | ..... | Will operate Feb. 12. | Stop Mountain Ave. and Montclair Heights to discharge passengers | ..... | ..... |
| | A.M. | P.M. | | | P.M. | P.M. | | P.M. |

Road crossing at the eastbound home signal of D.L. & W. R.R. If the westbound home signal is in stop position all trains must stop 50 feet east of Boonton Road crossing and a member of train crew may raise gates to allow traffic to pass over crossing by inserting a standard switch key into the key controller box located on the east end of instrument case on southwest side of Boonton Road crossing (key box is painted white), by turning key clockwise and *holding key in that position* which permits gates to raise. When key is removed gates will lower. Westbound trains will not exceed a speed of 30 miles per hour from a point 1600 feet east of Boonton Road crossing, and eastbound trains will not exceed a speed of 30 miles per hour from the eastbound home signal for D.L. & W. RR. interlocking. Trains may resume normal speed after passing Boonton Road crossing.

WESTWARD — FIRST CLASS — TRAINS (Read Down)

| Distance from Jersey City | Distance between Stations | No. 36 STATIONS | | 585 Holiday Only | 499 Daily Except Saturday Sunday& Holiday | | 513 Daily |
|---|---|---|---|---|---|---|---|
| | | | | P.M. | P.M. | | P.M. |
| | | | | N.B. | N.B. | | |
| .. | .. | NEW YORK Chambers St. (Fy.) L. | | 1.50 | 2.10 | | 3.10 |
| .. | .. | JERSEY CITY L. N | | 2.03 | 2.30 | | 3.25 |
| 2.2 | 2.2 | CROXTON N | | 2.08 | 2.35 | | 3.30 |
| 4.4 | 2.2 | N. Y. & G. L. JCT. N | | 2.12 | 2.39 | | 3.34 |
| 6.8 | 2.4 | ARLINGTON | | s 2.16 | s 2.43 | | s 3.38 |
| 7.5 | 0.7 | WEST ARLINGTON N | | s 2.18 | s 2.45 | | * |
| 7.9 | 0.4 | NORTH NEWARK | | s 2.20 | s 2.47 | | s 3.41 |
| 8.5 | 0.6 | FOREST HILL | | s 2.22 | s 2.49 | | s 3.43 |
| 9.4 | 0.9 | BELWOOD PARK | | s 2.25 | s 2.51 | | |
| 9.8 | 0.4 | ORCHARD ST. D | | s 2.27 | s 2.53 | | s 3.46 |
| 10.2 | 0.4 | WALNUT ST., (Bloomfield) | | s 2.29 | s 2.55 | | s 3.48 |
| 10.9 | 0.7 | GLEN RIDGE | | s 2.32 | s 2.57 | | s 3.50 |
| 11.9 | 1.0 | MONTCLAIR D | | s 2.36 | s 3.00 | | s 3.54 |
| 12.8 | 0.9 | WATCHUNG AVE. | | s 2.39 | s 3.03 | | s 3.57 |
| 13.7 | 0.9 | UPPER MONTCLAIR D | | s 2.41 | s 3.06 | | s 4.00 |
| 14.2 | 0.5 | MOUNTAIN AVE. | | s 2.44 | s 3.08 | | s 4.02 |
| 14.8 | 0.6 | MONTCLAIR HGTS. D | | s 2.47 | s 3.10 | | s 4.04 |
| 16.5 | 1.7 | GREAT NOTCH D | | s 2.53 | s 3.14 | | s 4.08 |
| 18.6 | 2.1 | LITTLE FALLS D | | | | | s 4.12 |
| 19.2 | 0.6 | SINGAC | | | | | |
| 21.5 | 2.3 | MOUNTAIN VIEW D.L. & W.R.R. Crossing | | | | | s 4.17 |
| 22.4 | 0.9 | WAYNE D | | | | | s 4.20 |
| 23.9 | 1.5 | PEQUANNOCK | | | | | s 4.23 |
| 25.5 | 1.6 | POMPTON PLAINS D | | | | | s 4.26 |
| 26.9 | 1.4 | RIVERDALE | | | | | |
| 27.6 | 0.7 | POMPTON | | | | | s 4.31 |
| 28.0 | 0.4 | POMPTON JCT. N.Y.S. & W.R.R. Crossing | | | | | |
| 29.8 | 1.8 | HASKELL | | | | | s 4.35 |
| 31.3 | 1.5 | WANAQUE-MIDVALE D | | | | | s 4.39 |
| .. | .. | | | | | | Saturdays stop West Arlington discharge passengers. Arrive Wanaque-Midvale 4.42 P.M. |
| | | | | P.M. | P.M. | | P.M. |

Single Track

When trains meet at Pompton Plains westbound train will not exceed speed of 5 miles per hour over Jackson Ave. crossing at Pompton Plains, account automatic flagman inoperative.

Belmont Ave. crossing located 800 feet west of Wanaque-Midvale; cars must not be left standing on side track within 50 feet of crossing; switching movements must be protected by member of crew stationed on crossing.

## HOURS DURING WHICH BLOCK STATIONS ARE IN OPERATION

ORCHARD ST.—7.40 A.M.–6.30 P.M. Saturdays 7.40 A.M.–3.40 P.M. Sundays and Holidays closed.

MONTCLAIR.—6.30 A.M.–7.30 P.M. Sundays and Holidays closed.



WESTWARD — FIRST CLASS — TRAINS (Read Down)

| | | 517 Daily | 519 Daily Except Saturday Sunday& Holiday | 521 Daily Except Saturday Sunday& Holiday | 409 Daily Except Saturday Sunday& Holiday | 523 Daily Except Saturday Sunday& Holiday | 591 Holiday Only | 525 Daily Except Saturday Sunday& Holiday |
|---|---|---|---|---|---|---|---|---|
| | | P.M. | P.M. | P.M. | P.M. | P.M. | P.M. | P.M. |
| | | | N.B. | N.B. | N.B. | N.B. | N.B. | N.B. |
| | | 4.30 | 5.00 | 5.00 | 5.08 | 5.20 | 5.20 | 5.20 |
| | | 4.46 | 5.14 | 5.17 | 5.25 | 5.33 | 5.34 | 5.37 |
| | | 4.51 | 5.19 | 5.22 | 5.30 | 5.38 | 5.39 | 5.42 |
| | | 4.55 | 5.23 | 5.26 | 5.34 | 5.42 | 5.43 | 5.46 |
| | | s 4.58 | | s 5.30 | s 5.37 | | s 5.47 | |
| | | H | | | s 5.39 | | s 5.49 | |
| | | s 5.01 | | s 5.33 | s 5.41 | s 5.46 | s 5.51 | |
| | | s 5.03 | | | s 5.43 | | s 5.53 | |
| | | s 5.05 | | | | | s 5.55 | s 5.53 |
| | | s 5.07 | | s 5.37 | | | s 5.57 | |
| | | s 5.09 | | s 5.39 | | | s 5.59 | |
| | | s 5.12 | | s 5.41 | | | s 6.01 | s 5.57 |
| | | s 5.15 | | s 5.44 | | s 5.53 | s 6.04 | s 6.01 |
| | | s 5.18 | s 5.32 | s 5.47 | | | s 6.06 | s 6.05 |
| | | s 5.21 | s 5.37 | s 5.50 | | | s 6.09 | s 6.09 |
| | | s 5.23 | s 5.39 | s 5.52 | | | s 6.11 | s 6.11 |
| | | s 5.25 | s 5.41 | s 5.54 | | | s 6.13 | s 6.13 |
| | | s 5.30 | 5.45 | s 5.58 | | s 6.05 | s 6.17 | s 6.18 |
| | | s 5.35 | | | | s 6.10 | s 6.22 | |
| | | f 5.37 | | | | s 6.12 | * | |
| | | s 5.40 | | | | s 6.16 | s 6.26 | |
| | | s 5.43 | | | | s 6.19 | s 6.29 | |
| | | s 5.46 | | | | s 6.22 | s 6.32 | |
| | | s 5.49 | | | | s 6.26 | s 6.35 | |
| | | | | | | | * | |
| | | s 5.53 | | | | s 6.30 | s 6.39 | No. 591 stop Singac and Riverdale discharge passengers. Will not operate Nov. 25, Dec. 25, Jan. 1 and Feb. 12. |
| | | s 5.57 | | | | s 6.35 | s 6.42 | |
| | | s 6.00 | | | | s 6.38 | s 6.45 | |
| | | Holidays stop West Arlington. | | | | | | |
| | | P.M. | P.M. | P.M. | P.M. | P.M. | P.M. | P.M. |

NORTH FULLERTON AVE.—11.00 A.M.–7.00 P.M. Sundays and Holidays closed.

UPPER MONTCLAIR.—7.20 A.M.–6.50 P.M. Saturdays 7.20 A.M.–4.20 P.M. Sundays and Holidays closed.

MONTCLAIR HEIGHTS.—7.40 A.M.–6.45 P.M. Saturdays 7.40 A.M.–4.40 P.M. Sundays and Holidays closed.

GREAT NOTCH.—7.00 A.M.–11.00 P.M.

LITTLE FALLS.—5.45 A.M.–8.30 P.M. Sundays closed.

WAYNE.—7.30 A.M.–4.30 P.M. Sundays and Holidays closed.

POMPTON PLAINS.—6.00 A.M.–10.00 P.M. Sundays and Holidays closed.

WANAQUE-MIDVALE.—6.45 A.M.–4.45 P.M. Sundays 12.35 P.M.–8.35 P.M. Holidays 8.20 A.M.–5.20 P.M.

WESTWARD — FIRST CLASS — TRAINS (Read Down)

| Distance from Jersey City | Distance between Stations | No. 36 STATIONS | | 527 | 529 | 413 | 531 |
|---|---|---|---|---|---|---|---|
| | | | | Daily Except Saturday Sunday& Holiday | Daily Except Saturday Sunday& Holiday | Daily Except Saturday Sunday& Holiday | Daily Except Saturday Sunday& Holiday |
| | | | | P.M. | P.M. | P.M. | P.M. |
| | | | | N.B. | N.B. | N.B. | N.B. |
| .. | .. | NEW YORK Chambers St. (Fy.) L. | | 5.28 | 5.38 | 5.48 | 6.00 |
| .. | .. | JERSEY CITY L. N | | 5.42 | 5.55 | 6.04 | 6.14 |
| 2.2 | 2.2 | CROXTON N | | 5.47 | 6.00 | 6.09 | 6.19 |
| 4.4 | 2.2 | N. Y. & G. L. JCT. N | | 5.51 | 6.04 | 6.13 | 6.23 |
| 6.8 | 2.4 | ARLINGTON | | s 5.55 | s 6.07 | s 6.17 | |
| 7.5 | 0.7 | WEST ARLINGTON N | | | s 6.09 | s 6.19 | |
| 7.9 | 0.4 | NORTH NEWARK | | s 5.58 | s 6.11 | s 6.21 | |
| 8.5 | 0.6 | FOREST HILL | | s 6.00 | s 6.13 | s 6.24 | |
| 9.4 | 0.9 | BELWOOD PARK | | | s 6.15 | | |
| 9.8 | 0.4 | ORCHARD ST. D | | s 6.04 | s 6.17 | | |
| 10.2 | 0.4 | WALNUT ST., (Bloomfield) | | s 6.06 | s 6.19 | | |
| 10.9 | 0.7 | GLEN RIDGE | | | s 6.22 | | |
| 11.9 | 1.0 | MONTCLAIR D | | s 6.10 | s 6.25 | | s 6.33 |
| 12.8 | 0.9 | WATCHUNG AVE. | | s 6.13 | s 6.28 | | s 6.36 |
| 13.7 | 0.9 | UPPER MONTCLAIR D | | s 6.16 | s 6.31 | | s 6.40 |
| 14.2 | 0.5 | MOUNTAIN AVE. | | s 6.18 | s 6.33 | | s 6.42 |
| 14.8 | 0.6 | MONTCLAIR HGTS. D | | s 6.20 | s 6.35 | | s 6.44 |
| 16.5 | 1.7 | GREAT NOTCH D | | s 6.25 | s 6.40 | | s 6.49 |
| 18.6 | 2.1 | LITTLE FALLS D | | s 6.30 | s 6.45 | | |
| 19.2 | 0.6 | SINGAC | | | s 6.47 | | |
| 21.5 | 2.3 | MOUNTAIN VIEW D.L. & W.R.R. Crossing | | s 6.34 | s 6.51 | | |
| 22.4 | 0.9 | WAYNE D | | s 6.37 | s 6.54 | | |
| 23.9 | 1.5 | PEQUANNOCK | | s 6.40 | s 6.57 | | |
| 25.5 | 1.6 | POMPTON PLAINS D | | s 6.43 | s 7.00 | | |
| 26.9 | 1.4 | RIVERDALE | | | | | |
| 27.6 | 0.7 | POMPTON | | s 6.47 | s 7.04 | | |
| 28.0 | 0.4 | POMPTON JCT. N.Y.S. & W.R.R. Crossing | | | | | |
| 29.8 | 1.8 | HASKELL | | s 6.51 | s 7.08 | | |
| 31.3 | 1.5 | WANAQUE-MIDVALE D | | s 6.55 | s 7.11 | | |
| .. | .. | | | | | | |
| .. | .. | | | | | | |
| .. | .. | | | | | | |
| .. | .. | | | | | | |
| .. | .. | | | | | | |
| .. | .. | | | | | | |
| .. | .. | | | | | | |
| | | | | P.M. | P.M. | P.M. | P.M. |

Single Track

### Sidings

| | Capacity |
|---|---|
| Little Falls | 26 Cars |
| Wayne | 20 " |
| Pompton Plains | 25 " |
| Pompton Jct. | 12 " |
| Orange | 5 " |
| Watsessing Jct. | 15 " |



WESTWARD — FIRST CLASS — TRAINS (Read Down)

| 593 | 533 | 535 | 537 | 539 | 541 | 543 | 545 | |
|---|---|---|---|---|---|---|---|---|
| Saturday and Holiday Only | Daily Except Saturday Sunday& Holiday | Daily | Daily Except Saturday Sunday& Holiday | Daily | Daily Except Sunday | Daily | Daily Except Sunday | |
| P.M. | P.M. | P.M. | P.M. | P.M. | P.M. | P.M. | P.M. | |
| N.B. | N.B. | N.B. | N.B. | N.B. | N.B. | N.B. | N.B. | |
| 6.00 | 6.20 | 6.50 | 7.30 | 8.15 | 9.30 | 10.15 | 11.30 | |
| 6.14 | 6.33 | 7.03 | 7.47 | 8.35 | 9.45 | 10.35 | 11.55 | |
| 6.19 | 6.38 | 7.08 | 7.52 | 8.40 | 9.50 | 10.40 | 12.00 | |
| 6.23 | 6.42 | 7.12 | 7.56 | 8.44 | 9.54 | 10.44 | 12.04 | |
| s 6.27 | s 6.45 | s 7.16 | s 8.00 | s 8.48 | s 9.58 | s10.48 | s12.08 | |
| * | s 6.47 | s 7.18 | s 8.02 | s 8.50 | s10.00 | * | s12.10 | |
| s 6.30 | s 6.49 | s 7.20 | s 8.04 | s 8.52 | s10.02 | s10.52 | s12.12 | |
| s 6.32 | s 6.51 | s 7.22 | s 8.06 | s 8.54 | s10.04 | * | s12.14 | |
| s 6.34 | s 6.53 | s 7.24 | * | s 8.56 | s10.07 | * | s12.16 | |
| s 6.36 | s 6.55 | s 7.26 | s 8.10 | s 8.58 | s10.09 | s10.57 | s12.18 | |
| s 6.38 | s 6.57 | s 7.28 | s 8.12 | s 9.00 | s10.11 | * | s12.20 | |
| s 6.40 | s 6.59 | s 7.30 | s 8.14 | s 9.02 | s10.13 | s11.01 | s12.22 | |
| s 6.43 | s 7.02 | s 7.33 | s 8.17 | s 9.05 | s10.15 | s11.04 | s12.25 | |
| s 6.46 | s 7.05 | s 7.36 | s 8.20 | s 9.07 | s10.17 | s11.06 | s12.27 | |
| s 6.48 | s 7.08 | s 7.39 | s 8.23 | s 9.09 | s10.19 | s11.09 | s12.29 | |
| s 6.50 | s 7.10 | s 7.41 | s 8.25 | s 9.11 | s10.22 | * | s12.31 | |
| s 6.52 | s 7.12 | s 7.43 | * | s 9.13 | s10.24 | * | s12.33 | |
| s 6.58 | s 7.16 | s 7.47 | s 8.31 | s 9.18 | s10.28 | s11.17 | s12.37 | |
| | s 7.21 | s 7.52 | | s 9.23 | | s11.22 | s12.42 | |
| | s 7.23 | * | | s 9.25 | | * | * | |
| | s 7.26 | s 7.56 | | s 9.28 | | s11.26 | s12.46 | |
| | s 7.29 | s 7.59 | | s 9.31 | | s11.29 | s12.48 | |
| | s 7.32 | s 8.02 | | s 9.34 | | s11.32 | s12.51 | |
| | s 7.35 | s 8.05 | | s 9.37 | | s11.35 | s12.54 | |
| | * | | | | | | | |
| | s 7.39 | s 8.09 | Will operate Oct. 12, Nov. 2. | s 9.41 | No. 543 stop West Arlington, Forest Hill, Belwood Park, Walnut St., Mountain Ave., Montclair Heights, Singac, to discharge passengers. | s11.38 | s12.57 | |
| | | | | | | | | |
| | s 7.43 | s 8.13 | | s 9.46 | | s11.43 | s 1.01 | |
| | s 7.47 | s 8.16 | | s 9.49 | | s11.46 | s 1.04 | |
| Stop West Arlington, discharge passengers. Will not operate Feb. 22. | Stop Riverdale to discharge passengers. | Stop Singac to discharge passengers. | Stop Belwood Park and Montclair Heights to discharge passengers. | | | | Stop Singac to discharge passengers. | |
| P.M. | P.M. | P.M. | P.M. | P.M. | P.M. | P.M. | A.M. | |

## EASTWARD — FIRST CLASS — TRAINS (Read Up)

| Distance from West Orange | Distance between Stations | No. 36 STATIONS | | | | 492 Saturday Only Except Holiday A.M. | 404 Daily Except Saturday Sunday& Holiday A.M. |
|---|---|---|---|---|---|---|---|
| 4.0 | 0.8 | FOREST HILL....A. | | | No. 492 will operate Feb. 12. | s 7.07 | s 7.32 |
| 3.2 | 0.5 | SILVER LAKE | | | | s 7.05 | s 7.30 |
| 2.7 | 0.5 | BLOOMFIELD.....D | | | | s 7.03 | s 7.28 |
| 2.2 | 0.3 | WATSESSING JCT. | | | | s 7.01 | s 7.26 |
| 1.9 | 0.6 | EAST ORANGE | | | | s 6.59 | s 7.24 |
| 1.3 | 0.4 | BRIGHTON AVE. | | | | s 6.57 | s 7.22 |
| 0.9 | 0.6 | ORANGE | | | | s 6.55 | s 7.20 |
| 0.3 | 0.3 | LLEWELLYN | | | | s 6.53 | s 7.18 |
| .. | .. | WEST ORANGE....L. D | | | | 6.52 | 7.16 |
| | | | | | | A.M. | A.M. |

Single Track

## WESTWARD — FIRST CLASS — TRAINS (Read Down)

| Distance from Forest Hill | Distance between Stations | No. 36 STATIONS | | 401 Daily Except Sunday and Holiday A.M. | | 403 Daily Except Sunday and Holiday A.M. | 483 Daily Except Saturday Sunday& Holiday A.M. |
|---|---|---|---|---|---|---|---|
| .. | .. | FOREST HILL....L. | No. 401 will operate Feb. 12. | s 6.34 | No. 403 will operate Feb. 12. | s 7.25 | s 8.10 |
| 0.8 | 0.8 | SILVER LAKE | | s 6.36 | | f 7.29 | s 8.12 |
| 1.3 | 0.5 | BLOOMFIELD.....D | | s 6.38 | | f 7.32 | s 8.14 |
| 1.8 | 0.5 | WATSESSING JCT. | | f 6.40 | | | f 8.15 |
| 2.1 | 0.3 | EAST ORANGE | | f 6.42 | | f 7.34 | f 8.17 |
| 2.7 | 0.6 | BRIGHTON AVE. | | | | f 7.36 | f 8.19 |
| 3.1 | 0.4 | ORANGE | | f 6.44 | | f 7.38 | s 8.21 |
| 3.7 | 0.6 | LLEWELLYN | | s 6.46 | | f 7.40 | f 8.23 |
| 4.0 | 0.3 | WEST ORANGE..A. D | | 6.47 | | 7.42 | 8.25 |
| | | | | A.M. | | A.M. | A.M. |

Single Track

Eastbound trains are superior to westbound trains of the same class, except:
No. 401 is superior to Nos. 492, 404 and 406.
No. 403 is superior to No. 404 to Silver Lake. No. 403 take siding.
No. 403 is superior to No. 406.
No. 483 is superior to No. 408.
No. 405 is superior to No. 410.
No. 407 is superior to Nos. 496, 412, and 498.
No. 409 is superior to Nos. 496, 412, and 498.
No. 413 is superior to No. 412 and 498.

Hours during which block stations are in operation:
West Orange. 7.00 A.M. to 4.00 P.M. Sundays closed.
Bloomfield Ave. 6.00 A.M. to 10.00 P.M. Sundays closed.

Long siding east of Orange and long siding at Watsessing Junction are designated as passing sidings.

Orange Branch Forest Hill to West Orange will be under yard limit rules.

| Speed Restrictions: | Miles per Hour |
|---|---|
| Passenger trains | 35 |
| Freight trains and trains hauling wrecking derrick or eight-wheel swivel truck cranes, steam shovels and other similar pivoted machinery | 20 |
| Orange Branch trains entering Forest Hill station | 5 |
| Between Silver Lake and Bloomfield Ave. account Conley frogs | 15 |
| Through interlocking limits OF Tower Bloomfield | 15 |



## EASTWARD — FIRST CLASS — TRAINS (Read Up)

| | 406 Daily Except Sunday and Holiday A.M. | 408 Daily Except Saturday Sunday& Holiday A.M. | | 410 Daily Except Saturday Sunday& Holiday P.M. | 496 Daily Except Saturday Sunday& Holiday P.M. | 412 Daily Except Saturday Sunday& Holiday P.M. | | 498 Daily Except Saturday Sunday& Holiday P.M. |
|---|---|---|---|---|---|---|---|---|
| No. 406 will operate Feb. 12. | s 8.08 | s 8.52 | | s 5.18 | s 5.49 | s 6.15 | | x 6.55 |
| | s 8.06 | f 8.50 | | f 5.16 | s 5.47 | | | |
| | s 8.04 | s 8.48 | | f 5.14 | | | | |
| | s 8.02 | f 8.47 | | s 5.12 | | | | |
| | s 8.00 | s 8.46 | | s 5.10 | | s 6.10 | | |
| | s 7.58 | s 8.44 | | s 5.08 | | | | |
| | s 7.56 | f 8.42 | | s 5.06 | | | | |
| | s 7.54 | f 8.40 | | s 5.04 | s 5.37 | | | |
| | 7.52 | 8.38 | | 5.03 | 5.36 | 6.02 | | 6.40 |
| | A.M. | A.M. | | P.M. | P.M. | P.M. | | P.M. |

## WESTWARD — FIRST CLASS — TRAINS (Read Down)

| | | | | 405 Daily Except Saturday Sunday& Holiday P.M. | 407 Daily Except Saturday Sunday& Holiday P.M. | 409 Daily Except Saturday Sunday& Holiday P.M. | | 413 Daily Except Saturday Sunday& Holiday P.M. |
|---|---|---|---|---|---|---|---|---|
| | | | | s 4.30 | s 5.20 | s 5.43 | | s 6.24 |
| | | | | s 4.32 | s 5.22 | s 5.46 | | s 6.26 |
| | | | | s 4.34 | s 5.24 | s 5.48 | | s 6.28 |
| | | | | | f 5.26 | | | |
| | | | | s 4.36 | s 5.28 | s 5.51 | | s 6.30 |
| | | | | s 4.38 | s 5.30 | s 5.53 | | s 6.32 |
| | | | | s 4.40 | s 5.32 | s 5.55 | | s 6.34 |
| | | | | s 4.42 | s 5.34 | s 5.57 | | s 6.36 |
| | | | | 4.44 | 5.35 | 5.58 | | 6.37 |
| | | | | P.M. | P.M. | P.M. | | P.M. |

Cars must not be placed within 200 feet of private crossing west of Forest Hill.

Class N engines are restricted on H. B. Salmon coal trestle west of Forest Hill.

Class N–K4 engines are restricted on Black Diamond Coal Co. siding, Orange.

Engines are restricted on Feigenspan's trestle, East Orange.

Eastbound trains stopping at Bloomfield, Orange Branch, will stop clear of crossing. Westbound trains except train 409 will stop with engine east of crossi g.

Light engines and extra trains between Forest Hill and Bloomfield from 8.30 P.M. to 6.00 A.M. week days will reduce speed to five miles per hour over all grade crossings except Grove St. and Bloomfield Ave., Bloomfield, stop and flag Between 12.01 A.M. and 6 A.M. daily, stop and flag over Belmont Ave., and Franklin St., Silver Lake.

Light engines and trains Bloomfield and West Orange between 10 A.M. and 3 P.M. week days, 10 A.M. and 1.01 P.M. Saturdays, stop and flag over all crossings, Bloomfield to West Orange.

Between 7.00 P.M. and 6.00 A.M. week days, light engines and trains will stop and flag over all crossings, Bloomfield to West Orange.

Between 5.00 P.M. Saturday and 6.00 A.M. Monday, engines and trains will stop and flag over all crossings Forest Hill to West Orange.

## EASTWARD — FIRST CLASS — TRAINS (Read Up)

| Distance from Essex Fells | Distance between Stations | No. 36 STATIONS | | 590 | 458 | | 582 |
|---|---|---|---|---|---|---|---|
| | | | | Holiday Only | Daily Except Saturday Sunday& Holiday | | Saturday Only Except Holiday |
| | | | | A.M. | A.M. | | A.M. |
| 5.7 | 1.9 | GREAT NOTCH A. D | No. 590 will not operate Oct. 12, Nov. 25, Dec. 25, Jan. 1 and Feb. 22. | s 7.19 | s 7.39 | ..... | s 7.44 |
| 3.8 | 1.7 | CEDAR GROVE..... | | s 7.15 | s 7.34 | ..... | s 7.40 |
| 2.1 | 1.1 | VERONA.....D | | s 7.11 | s 7.30 | ..... | s 7.36 |
| 1.0 | 1.0 | CALDWELL.....D | | s 7.08 | s 7.27 | ..... | s 7.33 |
| .. | .. | ESSEX FELLS....L. D | | 7.05 | 7.22 | ..... | 7.30 |
| | | | | A.M. | A.M. | | A.M. |

Single Track

## WESTWARD — FIRST CLASS — TRAINS (Read Down)

| Distance from Great Notch | Distance between Stations | No. 36 STATIONS | 479 | | 481 | | 583 |
|---|---|---|---|---|---|---|---|
| | | | Saturday Only Except Holiday | | Holiday Only | | Saturday Only Except Holiday |
| | | | A.M. | | A.M. | | P.M. |
| .. | .. | GREAT NOTCH L.D | x 7.10 | No. 481 will not operate Oct. 12, Nov. 25, Dec. 25, Jan. 1 and Feb. 22. | x 7.21 | ..... | s 2.23 |
| 1.9 | 1.9 | CEDAR GROVE..... | ..... | | ..... | ..... | s 2.28 |
| 3.6 | 1.7 | VERONA.....D | ..... | | ..... | ..... | s 2.34 |
| 4.7 | 1.1 | CALDWELL.....D | 7.20 | | 7.39 | ..... | s 2.37 |
| 5.7 | 1.0 | ESSEX FELLS.....A. D | ..... | | ..... | ..... | 2.40 |
| | | | A.M. | | A.M. | | P.M. |

Single Track

Eastbound trains are superior to westbound trains of the same class, except:

No. 479 is superior to No. 516.

Trains will have right over opposing trains which are run by the same engine and crew between Caldwell and Essex Fells.

Hours during which block stations are in operation:

Great Notch. 7.00 A.M.–11.00 P.M.

Verona. 7.00 A.M.–4.00 P.M.
Sundays closed.

Caldwell. 7.00 A.M.–7.15 P.M.
Sundays closed.

Essex Fells. 7.00 A.M.–4.00 P.M. Sundays closed.



## EASTWARD — FIRST CLASS — TRAINS (Read Up)

| | | | | | 464 | 516 | | |
|---|---|---|---|---|---|---|---|---|
| | | | | | Daily Except Saturday Sunday& Holiday | Daily Except Sunday | | |
| | | | | | A.M. | A.M. | | |
| | | | | | 8.00 | s 8.37 | | |
| | | | | | s 7.57 | s 8.33 | | |
| | | | | | s 7.53 | s 8.29 | | |
| | | | | | s 7.50 | s 8.26 | | |
| | | | | | 7.45 | 8.23 | | |
| | | | | | A.M. | A.M. | | |

## WESTWARD — FIRST CLASS — TRAINS (Read Down)

| 585 | | | 519 | 521 | 531 | 593 | | 537 |
|---|---|---|---|---|---|---|---|---|
| Holiday Only | | | Daily Except Saturday Sunday& Holiday | Daily Except Saturday Sunday& Holiday | Daily Except Saturday Sunday& Holiday | Saturday and Holiday Only | No. 593 will not operate Feb. 22 | Daily Except Saturday Sunday& Holiday |
| P.M. | | | P.M. | P.M. | P.M. | P.M. | | P.M. |
| s 2.53 | ..... | ..... | 5.45 | s 6.06 | s 6.49 | s 6.58 | No. 537 will operate Oct. 12, Nov. 2, | s 8.31 |
| s 2.58 | ..... | ..... | s 5.49 | s 6.11 | s 6.54 | s 7.05 | | s 8.38 |
| s 3.05 | ..... | ..... | s 5.54 | s 6.12 | s 7.02 | s 7.11 | | s 8.44 |
| s 3.08 | ..... | ..... | s 5.57 | s 6.19 | s 7.06 | s 7.14 | | s 8.48 |
| 3.11 | ..... | ..... | 6.00 | 6.22 | 7.09 | 7.17 | | ..... |
| P.M. | | | P.M. | P.M. | P.M. | P.M. | | P.M. |

Speed Restrictions: Miles per Hour

| | |
|---|---|
| Passenger trains | 35 |
| Freight trains | 30 |
| Ryerson Ave. crossing, east of Caldwell | 5 |
| Bloomfield Ave. tunnel, M.P. 20.30 and 20.50 | 25 |
| Trains hauling wrecking derrick, eight-wheel swivel truck cranes, steam shovels and other similar pivoted machinery | 20 |

The territory from 3,000 feet east end of Caldwell yard to 1,500 feet west of the west end of Essex Fells yard will be under yard limit rules.

Between 9.00 P.M. and 6.00 A.M. first class trains 5 miles per hour over Francisco Ave. Extra trains and light engines come to full stop before proceeding over crossing.

Main track at Caldwell will be occupied with passenger equipment from arrival No. 537 until 6.30 A.M.—Monday P.M. to Friday A.M. inclusive. Cut out button on crossing bell mast at Ryerson Ave. Crossing east of Caldwell. When cars stored on main track crew will press button and cut out bell. First train moving over crossing will flag over crossing account bell cut out. Monday to Fridays inclusive all light engines and extra trains between hours 9.00 P.M. and 6.30 A.M. will flag over this crossing and push button.

Light engines east and west and westbound extra trains stop and flag over Ryerson Ave. crossing, east of Caldwell.

Between 8.45 A.M. and 2.00 P.M. and between the hours of 8.00 P.M. and 6.45 A.M. Monday to Saturday inclusive; and between the hours of 8.00 P.M. Saturday and 6.45 A.M. Monday trains and engines stop, send member of crew ahead and flag over Roseland Avenue Crossing, Caldwell.

Class N engines restricted operating on Slayback and Van Orden siding, Caldwell.

EASTWARD — FIRST CLASS — TRAINS (Read Up)

| Distance from Thiells | Distance between Stations | No. 36 STATIONS | 604 Daily Except Sunday | 610 Daily Except Sunday and Holiday |
|---|---|---|---|---|
| | | | A.M. | A.M. |
| | | | N.B. | N.B. |
| .. | .. | NEW YORK Chambers St. (Fy.) ..A. | 7.06 | 8.04 |
| 38.1 | 2.2 | JERSEY CITY.....A. N | 6.54 | 7.52 |
| 35.9 | 5.3 | CROXTON.....N | 6.49 | 7.47 |
| 30.6 | 1.3 | N. J. & N. Y. JCT. | 6.40 | 7.38 |
| 29.3 | 0.9 | CARLSTADT | s 6.37 | s 7.35 |
| 28.4 | 1.0 | WOODRIDGE-Moonachie | s 6.35 | s 7.33 |
| 27.4 | 0.6 | HASBROUCK H'GTS. | s 6.33 | s 7.30 |
| 26.8 | 1.2 | WILLIAMS AVE. | s 6.30 | f 7.27 |
| 25.6 | 0.6 | HACKENSACK.....D | s 6.28 | s 7.25 |
| 25.0 | 0.5 | CENTRAL AVE. | s 6.26 | s 7.22 |
| 24.5 | 0.4 | ANDERSON ST. | s 6.24 | s 7.20 |
| 24.1 | 0.8 | FAIRMOUNT AVE. | s 6.22 | s 7.18 |
| 23.3 | 1.7 | NO. HACKENSACK | s 6.20 | s 7.15 |
| 21.6 | 0.8 | RIVER EDGE | s 6.17 | s 7.12 |
| 20.8 | 0.6 | NEW MILFORD | s 6.15 | s 7.09 |
| 20.2 | 1.5 | ORADELL.....D | s 6.13 | s 7.07 |
| 18.7 | 1.2 | EMERSON | s 6.10 | s 7.04 |
| 17.5 | 0.9 | WESTWOOD.....D | s 6.07 | s 7.01 |
| 16.6 | 1.3 | HILLSDALE.....D | s 6.05 | s 6.58 |
| 15.3 | 0.9 | WOODCLIFF LAKE | s 6.02 | s 6.55 |
| 14.4 | 0.6 | PARK RIDGE.....D | s 6.00 | s 6.53 |
| 13.8 | 1.3 | MONTVALE | s 5.58 | s 6.51 |
| 12.5 | 2.4 | PEARL RIVER.....D | s 5.55 | s 6.48 |
| 10.1 | 0.2 | NANUET.....D | s 5.50 | s 6.43 |
| 9.9 | 2.5 | NANUET JUNCTION | 5.49 | 6.42 |
| 7.4 | 0.6 | SPRING VALLEY....D | s 5.45 | s 6.38 |
| 6.8 | 2.0 | WOODBINE | 5.41 | 6.34 |
| 4.8 | 0.8 | NEW HEMPSTEAD | | |
| 4.0 | 0.7 | SUMMIT PARK | | |
| 3.3 | 1.2 | POMONA | | |
| 2.1 | 2.1 | MOUNT IVY | | |
| .. | .. | THIELLS.....L. | | |
| | | | A.M. | A.M. |

Single Track

Eastbound trains are superior to westbound trains of the same class, except: Nos. 613, 615, 617, 619, 623, and 625 are superior to No. 632.

Trains making station stop Carlstadt, will stop clear of Plank Road crossing.

Eastbound trains stopping at Woodridge will stop with engine east of Moonachie Ave.

Automatic electric crossing gates located at Malcolm Ave. crossing, Hasbrouck Heights: Eastbound trains making station stop at Williams Ave. stop with engine west of sign reading "End of Circuit" located 100 feet east of east end of station platform. Automatic cut out and cut in device will be connected to Hasbrouck Heights station switch located 700 feet east of crossing to permit raising of gates when switching is to be performed. The reversing of this switch will permit gates to raise. Westbound trains after reversing switch will not exceed speed of 5 miles per hour until crossing reached and will not pass over crossing until gates are lowered except by flag protection. When switching is being performed at Hasbrouck Heights, cars should not be left between switch and crossing as gates will remain lowered. Trains making switching movements in both directions must see that gates are lowered before proceeding over crossing.



EASTWARD — FIRST CLASS — TRAINS (Read Up)

| 614 Daily Except Saturday Sunday & Holiday | | 616 Daily Except Saturday Sunday & Holiday | 650 Saturday Only Except Holiday | 618 Daily Except Saturday Sunday & Holiday | | | | 632 Daily Except Saturday Sunday & Holiday |
|---|---|---|---|---|---|---|---|---|
| A.M. | | A.M. | A.M. | A.M. | | | | P.M. |
| N.B. | | N.B. | N.B. | N.B. | | | | x |
| 8.32 | | 8.43 | 8.49 | 8.49 | | | | |
| 8.17 | | 8.25 | 8.35 | 8.35 | | | | 8.28 |
| 8.12 | | 8.20 | 8.30 | 8.30 | | | | 8.23 |
| 8.03 | | 8.11 | 8.21 | 8.21 | | | | 8.15 |
| s 8.00 | | | | | | | | |
| s 7.57 | | | s 8.17 | s 8.17 | | | | |
| s 7.54 | | s 8.07 | s 8.14 | | | | | s 8.10 |
| * | | | s 8.11 | | | | | |
| s 7.50 | | | | | | | | |
| | | | | | | | | |
| s 7.47 | | | s 8.09 | s 8.11 | | | | |
| s 7.44 | | | | | | | | |
| s 7.42 | | | | | | | | |
| s 7.39 | | | s 8.04 | s 8.06 | | | | |
| s 7.36 | | | | | | | | |
| s 7.34 | | s 7.57 | s 8.00 | | | | | |
| s 7.31 | | | s 7.57 | s 8.02 | | | | |
| s 7.28 | | | s 7.54 | s 8.00 | | | | |
| s 7.25 | | | s 7.51 | s 7.57 | | | | 7.48 |
| s 7.22 | No. 614 stop Williams Ave., discharge passengers. Will operate Oct. 12, Nov. 2, Feb. 12. | s 7.50 | s 7.48 | | | | | |
| s 7.20 | | s 7.47 | s 7.46 | s 7.52 | | | | |
| s 7.18 | | s 7.45 | s 7.44 | | | | | |
| s 7.15 | | s 7.42 | s 7.41 | s 7.48 | | | | s 7.38 |
| s 7.10 | | s 7.37 | s 7.36 | | | | | s 7.33 |
| 7.09 | | 7.36 | 7.35 | 7.44 | | | | 7.32 |
| s 7.05 | | s 7.32 | s 7.31 | s 7.40 | | | | s 7.28 |
| 7.01 | | 7.27 | 7.27 | 7.35 | | | | 7.20 |
| A.M. | | A.M. | A.M. | A.M. | | | | P.M. |

Trains making station stop Hasbrouck Heights will stop with train clear of crossing.

When serving Industries So. Hackensack, all road crossings must be protected by member of crew.

When cars are left on siding at Essex St., Hackensack, they must not be placed within 100 feet of Sussex St. crossing.

Passenger trains stopping at Central Ave., Hackensack, will stop train clear of Central Ave. crossing.

Automatic crossing bell cutout device located in crossing gate cabin, Central Ave. When crossing gatemen not on duty trains switching or leaving cars within limits of bell circuit, must station member of crew at crossing to operate cutout device.

All movements over crossings in sidings at Carlstadt, Hackensack to Fairmount Ave. and Oradell must be protected by member of crew.

Eastbound trains stopping at Oradell and North Hackensack pull clear of road crossing.

Westbound trains stopping at Emerson pull clear of crossing east of station.

When trains meet at Westwood, the train operating main track will stop before passing over Irvington Street crossing, unless it is

WESTWARD — FIRST CLASS — TRAINS (Read Down)

| Distance from Jersey City | Distance between Stations | No. 36 STATIONS | 685 | 689 |
|---|---|---|---|---|
| | | | Saturday Only Except Holiday | Saturday Only Except Holiday |
| | | | P.M. | P.M. |
| | | | N.B. | N.B. |
| .. | .. | NEW YORK Chambers St. (Fy.) ..L. | 1.20 | 3.00 |
| .. | .. | JERSEY CITY.....L. N | 1.35 | 3.20 |
| 2.2 | 2.2 | CROXTON.....N | 1.40 | 3.25 |
| 7.5 | 5.3 | N. J. & N. Y. JCT. | 1.50 | 3.35 |
| 8.8 | 1.3 | CARLSTADT | s 1.52 | s 3.37 |
| 9.7 | 0.9 | WOODRIDGE–Moonachie | s 1.55 | s 3.39 |
| 10.7 | 1.0 | HASBROUCK H'GTS | s 1.58 | s 3.41 |
| 11.3 | 0.6 | WILLIAMS AVE. | s 2.00 | s 3.43 |
| 12.5 | 1.2 | HACKENSACK.....D | s 2.02 | s 3.45 |
| 13.1 | 0.6 | CENTRAL AVE. | s 2.04 | s 3.47 |
| 13.6 | 0.5 | ANDERSON ST. | s 2.07 | s 3.49 |
| 14.0 | 0.4 | FAIRMOUNT AVE. | s 2.09 | s 3.51 |
| 14.8 | 0.8 | NO. HACKENSACK | s 2.12 | s 3.54 |
| 16.5 | 1.7 | RIVER EDGE | s 2.15 | s 3.57 |
| 17.3 | 0.8 | NEW MILFORD | s 2.17 | s 4.00 |
| 17.9 | 0.6 | ORADELL.....D | s 2.19 | s 4.02 |
| 19.4 | 1.5 | EMERSON | s 2.22 | s 4.05 |
| 20.6 | 1.2 | WESTWOOD.....D | s 2.25 | s 4.08 |
| 21.5 | 0.9 | HILLSDALE.....D | s 2.27 | s 4.11 |
| 22.8 | 1.3 | WOODCLIFF LAKE | s 2.32 | s 4.14 |
| 23.7 | 0.9 | PARK RIDGE.....D | s 2.35 | s 4.17 |
| 24.3 | 0.6 | MONTVALE | s 2.38 | s 4.19 |
| 25.6 | 1.3 | PEARL RIVER.....D | s 2.43 | s 4.24 |
| 28.0 | 2.4 | NANUET.....D | s 2.48 | s 4.29 |
| 28.2 | 0.2 | NANUET JUNCTION | 2.54 | 4.35 |
| 30.7 | 2.5 | SPRING VALLEY....D | s 2.58 | s 4.40 |
| 31.3 | 0.6 | WOODBINE | 3.02 | 4.44 |
| 33.3 | 2.0 | NEW HEMPSTEAD | | |
| 34.1 | 0.8 | SUMMIT PARK | | |
| 34.8 | 0.7 | POMONA | Will operate Feb. 12. | |
| 36.0 | 1.2 | MOUNT IVY | | |
| 38.1 | 2.1 | THIELLS.....A. | | |
| | | | P.M. | P.M. |

Single Track

known that flasher light signals at the crossing are operating; the train operating through siding will stop and flag over Irvington Street crossing, as flasher signals do not work on that track.

When trains meet at Park Ridge and westbound train backs out of siding, member of crew must be stationed on Park Ave. crossing to protect movement over crossing on account of flasher lights not operating.

Engines are restricted from operating over coal hopper P. R. Fuel Co. siding. Crews placing cars west of hopper will use necessary reachers.

Light engines, work extras and crews performing switching service must not clear the main track for the purpose of meeting or passing trains at—Comfort Coal Co. switch, Pearl River, M. P. 25.80.

Cars must not be left standing on passing siding at Pearl River within 200 feet of Jefferson Ave. crossing.

When trains meet at Pearl River or Hillsdale, eastbound trains will not pass track circuit clearance post until westbound train arrives at siding.

Nanuet Junction, normal position of switch N. J. & N. Y. R. R.

Nanuet crossing of Piermont Branch and wye tracks, trains will stop, send man ahead turn target signal to proceed position before passing over crossing.

Spring Valley, junction of N. J. & N. Y. R. R. and Piermont Branch, normal position of switch N. J. & N. Y. R. R.



WESTWARD — FIRST CLASS — TRAINS (Read Down)

| 613 | 615 | 617 | 693 | 619 | 623 | 625 |
|---|---|---|---|---|---|---|
| Daily Except Saturday Sunday & Holiday | Daily Except Saturday Sunday & Holiday | Daily Except Saturday Sunday & Holiday | Saturday Only | Daily Except Saturday and Sunday | Daily Except Saturday Sunday & Holiday | Daily Except Saturday Sunday & Holiday |
| P.M. | P.M. | P.M. | P.M. | P.M. | P.M. | P.M. |
| N.B. | N.B. | N.B. | N.B. | N.B. | N.B. | N.B. |
| 4.30 | 5.00 | 5.15 | 5.08 | 5.28 | 5.48 | 6.40 |
| 4.45 | 5.13 | 5.30 | 5.30 | 5.42 | 6.04 | 6.55 |
| 4.50 | 5.18 | 5.35 | 5.35 | 5.47 | 6.09 | 7.00 |
| 4.59 | 5.26 | 5.44 | 5.44 | 5.56 | 6.18 | 7.09 |
| s 5.01 | | | s 5.46 | s 5.58 | s 6.20 | s 7.11 |
| s 5.03 | s 5.29 | | s 5.48 | s 6.01 | s 6.23 | s 7.13 |
| s 5.05 | s 5.31 | | s 5.51 | s 6.04 | s 6.26 | s 7.16 |
| s 5.07 | | | f 5.53 | s 6.06 | s 6.28 | s 7.18 |
| s 5.09 | | | s 5.56 | s 6.09 | s 6.31 | s 7.21 |
| s 5.11 | | | s 5.58 | s 6.11 | | s 7.23 |
| s 5.13 | s 5.36 | | s 6.00 | s 6.13 | s 6.34 | s 7.25 |
| s 5.15 | s 5.38 | | s 6.02 | s 6.15 | s 6.36 | s 7.27 |
| s 5.18 | s 5.40 | | s 6.04 | s 6.18 | s 6.39 | s 7.29 |
| s 5.21 | s 5.43 | s 5.56 | s 6.07 | s 6.21 | s 6.42 | s 7.32 |
| s 5.24 | s 5.45 | s 5.58 | s 6.09 | s 6.24 | s 6.45 | s 7.34 |
| s 5.26 | s 5.48 | s 6.01 | s 6.12 | s 6.27 | s 6.48 | s 7.37 |
| s 5.29 | | s 6.04 | s 6.15 | s 6.30 | s 6.51 | s 7.40 |
| s 5.33 | s 5.53 | s 6.07 | s 6.18 | s 6.33 | s 6.54 | s 7.43 |
| s 5.36 | s 5.55 | s 6.10 | s 6.21 | s 6.36 | s 6.57 | s 7.46 |
| s 5.40 | s 6.00 | s 6.14 | s 6.26 | s 6.40 | s 7.01 | s 7.50 |
| s 5.44 | s 6.03 | s 6.17 | s 6.29 | s 6.43 | s 7.04 | s 7.53 |
| s 5.48 | s 6.07 | s 6.20 | s 6.31 | s 6.46 | s 7.07 | s 7.55 |
| s 5.51 | s 6.10 | s 6.24 | s 6.34 | s 6.49 | s 7.10 | s 7.59 |
| s 5.56 | s 6.15 | s 6.29 | s 6.39 | s 6.54 | s 7.15 | s 8.04 |
| 6.02 | 6.21 | 6.30 | 6.45 | 7.00 | 7.21 | 8.10 |
| s 6.07 | s 6.26 | s 6.36 | s 6.50 | s 7.05 | s 7.26 | s 8.15 |
| 6.11 | 6.30 | 6.40 | 6.54 | 7.09 | 7.30 | 8.19 |
| | | | | | | Will operate Oct. 12, Nov. 2. |
| P.M. | P.M. | P.M. | P.M. | P.M | P.M. | P.M. |

All trains and light engines must stop, send member of crew ahead and flag over Church St. Crossing, west of Spring Valley.

Class C–K-5 and N engines are restricted west of Woodbine.

Class R & S engines are restricted on N. J. & N. Y. R. R.

All trains must stop and flag over Union Avenue crossing west end Woodbine yard. All switching movements over crossing must be protected by member of crew.

All switching movements over Central Highway crossing west of Thiells must be protected by member of crew.

Trains stop not less than 25 feet from Suffern-Mt. Ivy highway crossing, east of Mt. Ivy station, send man ahead, flag over crossing.

Main track at Woodbine will be occupied by passenger equipment from arrival of train 625 until departure of train 614 week days and from arrival of train 689 Saturdays to departure of train 614 Mondays.

SIDINGS:

Following sidings are designated as passing sidings:

| | *Capacity* |
|---|---|
| PEARL RIVER— | 30 Cars |
| PARK RIDGE— | 10 " |
| HILLSDALE— | 20 " |
| FAIRMOUNT AVE. to HACKENSACK | 180 " |

## EASTWARD — FIRST CLASS — TRAINS (Read Up)

| Distance from Suffern | Distance between Stations | No. 36 STATIONS | 604 Daily Except Sunday A.M. |
|---|---|---|---|
| 16.1 | 1.6 | SPARKILL ....A. D | |
| 14.5 | 1.0 | ORANGEBURG | |
| 13.5 | 4.3 | BLAUVELT | |
| 9.2 | 0.2 | NANUET CROSS'G | |
| 9.0 | 2.3 | NANUET JUNCTION | 5.49 |
| 6.7 | 1.3 | SPRING VALLEY....D | s 5.45 |
| 5.4 | 2.3 | MONSEY....D | |
| 3.1 | 3.1 | TALLMANS | |
| .. | .. | SUFFERN ....L. N | A.M. |

Single Track

## WESTWARD — FIRST CLASS — TRAINS (Read Down)

| Distance from Sparkill | Distance between Stations | No. 36 STATIONS | 685 Saturday Only Except Holiday P.M. |
|---|---|---|---|
| .. | .. | SPARKILL ....L. D | |
| 1.6 | 1.6 | ORANGEBURG | |
| 2.6 | 1.0 | BLAUVELT | |
| 6.9 | 4.3 | NANUET CROSS'G | |
| 7.1 | 0.2 | NANUET JUNCTION | 2.54 |
| 9.4 | 2.3 | SPRING VALLEY....D | s 2.58 |
| 10.7 | 1.3 | MONSEY....D | |
| 13.0 | 2.3 | TALLMANS | |
| 16.1 | 3.1 | SUFFERN ....A. N | P.M. |

Single Track

No. 685 will operate Feb. 12

Eastbound trains are superior to Westbound trains of the same class, except Nos 613, 615, 617, 619, 623 and 625 are superior to No. 632.

Engines and trains will flag over Orange Ave. crossing, Suffern, 12.30 A.M. to 6.45 A.M.

Trains and engines stop at Saddle River Road crossing, located 540 feet west of Monsey station and flag over crossing.

Spring Valley Jct., Piermont Branch and N. J. & N. Y. R. R., normal position of switch, N. J. & N. Y. R. R.

Nanuet Junction, normal position of switch, N. J. & N. Y. R. R.

Nanuet crossing of Piermont Branch and wye tracks, trains will stop, send man ahead, turn target signal to proceed position before passing over crossing.

Trains on Piermont Branch and wye track stop before crossing Main Street crossing, Nanuet.

Trains stop within 50 feet of state highway crossing, Tappan Congers Road, east of Orangeburg, send man ahead and flag over crossing.

Engines and trains using Piermont Branch at Sparkill will protect by flag against eastbound Northern R. R. trains in addition to securing permission to cross over.

Engines and trains on Piermont Branch will flag over Kipps crossing, Sparkill.

Class R & S engines are restricted Suffern to Sparkill.

### Telephones

| | | |
|---|---|---|
| Tallmans | SF | Tower |
| Monsey (on front of station) | SF | " |
| On Manual Block Signal Mast west of Spring Valley | SF | " |
| Spring Valley | SF | " |
| Nanuet Jct. | SF | " |
| Convent Swh., west of Sparkill | SF | " |
| Sparkill on station | SF | " |



## EASTWARD — FIRST CLASS — TRAINS (Read Up)

| | | 610 Daily Except Sunday and Holiday A.M. | 614 Daily Except Saturday Sunday & Holiday A.M. | | 650 Saturday Only Except Holiday A.M. | 616 Daily Except Saturday Sunday & Holiday A.M. | 618 Daily Except Saturday Sunday & Holiday A.M. | 632 Daily Except Saturday Sunday & Holiday P.M. x |
|---|---|---|---|---|---|---|---|---|
| | | 6.42 | 7.09 | No. 614 will operate Oct. 12, Nov. 2, Feb. 12. | 7.35 | 7.36 | 7.44 | 7.32 |
| | | s 6.38 | s 7.05 | | s 7.31 | s 7.32 | s 7.40 | s 7.28 |
| | | A.M. | A.M. | | A.M. | A.M. | A.M. | P.M. |

## WESTWARD — FIRST CLASS — TRAINS (Read Down)

| 689 Saturday Only Except Holiday P.M. | 613 Daily Except Saturday Sunday & Holiday P.M. | 615 Daily Except Saturday Sunday & Holiday P.M. | 617 Daily Except Saturday Sunday & Holiday P.M. | 693 Saturday Only P.M. | 619 Daily Except Saturday and Sunday P.M. | 623 Daily Except Saturday Sunday & Holiday P.M. | 625 Daily Except Saturday Sunday & Holiday P.M. | |
|---|---|---|---|---|---|---|---|---|
| 4.35 | 6.02 | 6.21 | 6.30 | 6.45 | 7.00 | 7.21 | 8.10 | No. 625 will operate Oct. 12, Nov. 2. |
| s 4.40 | s 6.07 | s 6.26 | s 6.36 | s 6.50 | s 7.05 | s 7.26 | s 8.15 | |
| P.M. | P.M. | P.M. | P.M. | P.M. | P.M. | P.M. | P.M. | |

### Speed restrictions:

| | Miles per Hour |
|---|---|
| Passenger trains: | |
| Suffern and Spring Valley | 30 |
| Spring Valley and Nanuet Junction | 60 |
| Nanuet Junction and Sparkill | 30 |
| Freight trains | 25 |
| Sparkill to Piermont Dock | 15 |
| Trains hauling wrecking derrick and eight-wheel swivel truck cranes, steam shovels and other similar pivoted machinery | 20 |
| MP. 3.20 ¼ mile east of Orangeburg to MP. 4.00 east of Blauvelt | 15 |
| Sparkill Road and Greenbush Road Crossings, 1st and 2d crossings east of Orangeburg | 5 |
| Sickletown Road crossing, one mile east Nanuet crossing | 5 |
| Curve Dykes crossing between Spring Valley and Nanuet Jct. | 35 |
| Dater's crossing between Suffern and Tallmans | 5 |
| Chestnut Street crossing, Suffern | 5 |
| Washington Ave. crossing, Suffern | 5 |
| Main Street crossing, Monsey | 10 |
| Monsey Heights crossing | 5 |

| Hours of Crossing Protection | Weekdays | Saturday |
|---|---|---|
| Orange Ave., Suffern— | 6.45 A.M.–12.30 A.M. | 6.45 A.M.–12.30 A.M. |
| Chestnut St., Suffern— | 8.00 A.M.–4.00 P.M. | 8.00 A.M.–4.00 P.M. |
| Main St., Spring Valley— | 5.30 A.M.–11.30 A.M. | 5.30 A.M.–10.00 A.M. |
| | 5.45 P.M.–8.30 P.M. | 1.30 P.M.–7.00 P.M. |

On Sundays and Holidays and during period crossings not protected, all trains and engines stop, send member of crew ahead and flag over crossing.

Hours during which block stations are in operation.

| | |
|---|---|
| Spring Valley.—6.30 A.M.–7.05 P.M. | Sundays closed. |
| Nanuet.—7.00 A.M.–4.00 P.M. | Sundays closed. |
| Sparkill.—7.15 A.M.–4.15 P.M. | Sundays closed. |

## EASTWARD — FIRST CLASS — TRAINS (Read Up)

| Distance from Nyack | Distance between Stations | No. 36 STATIONS | N.Y.S.&W. 850 Daily A.M. | N.Y.S.&W. 904 Daily Except Sunday and Holiday A.M. | N.Y.S.&W. 804 Daily Except Saturday Sunday & Holiday A.M. | 1100 Daily Except Sunday A.M. | N.Y.S.&W. 906 Daily Except Sunday A.M. |
|---|---|---|---|---|---|---|---|
| .. | .. | NEW YORK Chambers St. (Fy.) A. | | 6.39 | | N.B. 7.27 | 7.44 |
| 28.1 | 2.2 | JERSEY CITY A. N | | 6.15 | | 7.12 | 7.30 |
| 25.9 | 2.7 | CROXTON N | | 6.10 | | 7.07 | 7.25 |
| 23.2 | 0.2 | SUSQUEHANNA TRANSFER | s12.40 | s 6.06 | s 6.50 | | s 7.20 |
| 23.0 | 2.0 | NORTH BERGEN | | * | | | |
| 21.0 | 1.1 | GRANTON JCT. D | 12.37 | 6.03 | 6.47 | 7.00 | 7.17 |
| 19.9 | 0.9 | FAIRVIEW | | | | s 6.57 | |
| 19.0 | 0.7 | RIDGEFIELD | | | | s 6.55 | |
| 18.3 | 0.6 | MORSEMERE | | | | | |
| 17.7 | 1.0 | PALISADES PARK | | | | | |
| 16.7 | 2.5 | LEONIA | | | | s 6.50 | |
| 14.2 | 1.0 | ENGLEWOOD D | | Will operate Oct. 12 and Nov. 2 | | s 6.46 | |
| 13.2 | 1.0 | HUDSON AVE. | | | | s 6.44 | |
| 12.2 | 1.2 | TENAFLY D | | | | s 6.41 | |
| 11.0 | 1.0 | CRESSKILL D | | | | s 6.37 | |
| 10.0 | 1.0 | DEMAREST | | | Will operate Oct. 12 and Nov. 2 | s 6.34 | |
| 9.0 | 1.8 | CLOSTER D | | | | s 6.31 | |
| 7.2 | 0.8 | NORWOOD | | | | s 6.28 | |
| 6.4 | 2.0 | NORTHVALE | | | | s 6.25 | |
| 4.4 | 1.2 | SPARKILL D | | Stop North Bergen to discharge passengers. | | s 6.21 | |
| 3.2 | 1.2 | PIERMONT | | | | s 6.17 | |
| 2.0 | 1.5 | GRAND VIEW | | | | | |
| 0.5 | 0.5 | SOUTH NYACK | | | | s 6.12 | |
| .. | .. | NYACK L. D | | | | 6.10 | |
| | | | A.M. | A.M. | A.M. | A.M. | A.M. |

Single Track

Eastbound trains are superior to westbound trains of the same class.

Granton Jct. tower will be closed 10.30 P.M. to 6.30 A.M. weekdays and from 10.30 P.M. Saturday to 6.30 A.M. Monday.

Highway Crossing New Durham not equipped with reverse circuit, trains operating against current of traffic will not exceed speed of 5 miles per hour over crossing.

End of double track west of Tenafly station is equipped with automatic spring type switch. Normal position for eastward track.

The two main tracks at Closter, for a distance of 2400 feet, and at Sparkill, for a distance of 1350 feet, are operated as double track.

East end of double track at Closter is equipped with automatic spring type switch. Normal position for westbound track.

West end of double track at Closter is equipped with automatic spring type switch. Normal position for eastbound track.

East end of double track east of Sparkill is equipped with automatic spring type switch. Normal position for westbound track.

Trains finding westbound signals west end of double track at Tenafly or west end of double track at Closter in stop position, before proceeding must operate spring switch by hand and restore same to normal position after movement completed.

Engines and trains using Piermont Branch at Sparkill will protect by flag against eastbound Northern R. R. trains, in addition to securing permission to cross over.

West end of double track at Sparkill is controlled by hand thrown switch. Normal position for eastbound track. Between 6.00 A.M. and 8.15 A.M., 2.00 P.M.–7.45 P.M., weekdays; 6.00 A.M.–8.30 A.M., 12.45 P.M.–6.15 P.M., Saturdays, switch will be taken care of by switch-tender. At all other periods trainmen will handle switch.

Engines are restricted on McIndoe's trestle, Sparkill.



## EASTWARD — FIRST CLASS — TRAINS (Read Up)

| N.Y.S.&W. 806 Daily Except Sunday A.M. | N.Y.S.&W. 908 Daily Except Saturday Sunday & Holiday A.M. | N.Y.S.&W. 808 Daily Except Saturday Sunday & Holiday A.M. | N.Y.S.&W. 910 Daily Except Saturday Sunday & Holiday A.M. | 1102 Daily Except Sunday and Holiday A.M. | N.Y.S.&W. 960 Saturday and Holiday Only A.M. | N.Y.S.&W. 912 Daily Except Saturday Sunday & Holiday A.M. | N.Y.S.&W. 810 Daily Except Sunday A.M. | 1104 Daily Except Saturday Sunday & Holiday A.M. |
|---|---|---|---|---|---|---|---|---|
| | | | | N.B. | N.B. | N.B. | | N.B. |
| | 8.11 | | 8.26 | 8.37 | 8.43 | 8.43 | | 8.57 |
| | 7.57 | | 8.12 | 8.22 | 8.25 | 8.29 | | 8.44 |
| | 7.52 | | 8.07 | 8.17 | 8.20 | 8.24 | | 8.39 |
| s 7.25 | s 7.47 | s 7.50 | s 8.01 | s 8.13 | s 8.15 | s 8.17 | s 8.20 | s 8.35 |
| | * | | | | | | | |
| 7.22 | 7.43 | 7.47 | 7.58 | 8.09 | 8.11 | 8.14 | 8.17 | 8.32 |
| | | | | s 8.06 | No. 960 will not operate Oct. 12 and Nov. 2 | | | s 8.29 |
| | | | | | | | | s 8.27 |
| | | | | s 8.02 | | | | s 8.25 |
| | | | | s 7.59 | | | | s 8.22 |
| | | | | s 7.55 | | | | s 8.18 |
| | | | | s 7.52 | | | | s 8.15 |
| | | | | s 7.49 | | | | s 8.12 |
| | | | | s 7.45 | | | | s 8.09 |
| | | | | s 7.42 | | | | s 8.06 |
| | Stop North Bergen to discharge passengers. Will operate Oct. 12 and Nov. 2 | Will operate Oct. 12 and Nov. 2 | Will operate Oct. 12 and Nov. 2 | s 7.39 | No. 1102 will operate Oct. 12, Nov. 2, Feb. 12. | Will operate Oct. 12 and Nov. 2 | Sunday and Holiday arrive Susquehanna Transfer 8.25 A. M. | s 8.03 |
| | | | | s 7.36 | | | | s 8.00 |
| | | | | s 7.33 | | | | s 7.58 |
| | | | | s 7.29 | | | | s 7.54 |
| | | | | s 7.25 | | | | s 7.50 |
| | | | | s 7.22 | | | | s 7.47 |
| | | | | s 7.19 | | | | s 7.44 |
| | | | | 7.17 | | | | 7.42 |
| A.M. | A.M. | A.M. | A.M. | A.M. | A.M. | A.M. | A.M. | A.M. |

All trains and engines must stop at Cedar Hill Ave. crossing, Nyack, and protect movement over crossing with red flag by day and red light by night until entire movement is completed.

Cars in excess of 50 ton capacity must not be placed on J. J. Demarest Trestle at Closter.

Automatic cut-out with cut-in device at Madison and Union Avenues, Cresskill, controls located at Madison Ave., west of station. Trains performing switching movements will operate this device and member of crew protect crossing. This cut-in button must be restored to normal before leaving station.

Passenger trains in both directions stopping at Tenafly will stop train east of Washington St. crossing, located just west of station.

When trains meet at Tenafly, westbound train will not pass track circuit clearance post located on east side of Jay St., crossing second street west of station until east bound train arrives at Tenafly.

Freight trains making reverse movement on westward track from Industrial siding at Babbitt to Granton Jct. must not open inside switch until westbound train passing has cleared west end of siding, to permit proper operation of crossing signals on Babbitt crossing. Member of crew must protect reverse movement over crossing.

Class R & S engines are restricted tracks 3 and 4 between Granton Jct. and Lundys Lane; between Granton Jct. and Nyack.

Trains using tracks 3 and 4 between Lundys Lane and Granton Jct. will not occupy main track without permission from Train Dispatcher.

Class K–N engines restricted on trestles Highwood Coal Co., Leonia and Englewood Coal Co., east of Englewood.

Engines restricted Standard Corrugated Co. siding, Ridgefield, 180 feet west of switch point.

Class K & N engines restricted Geo. Fangman Co. siding, North Bergen.

## EASTWARD — FIRST CLASS — TRAINS (Read Up)

| Distance from Nyack | Distance between Stations | No. 36 STATIONS | N.Y.S.&W. 914 Sunday Only | N.Y.S.&W. 916 Daily Except Saturday Sunday & Holiday | N.Y.S.&W. 812 Daily Except Saturday Sunday & Holiday | N.Y.S.&W. 814 Daily | N.Y.S.&W. 816 Daily Except Saturday Sunday & Holiday |
|---|---|---|---|---|---|---|---|
| | | | A.M. | A.M. | A.M. | A.M. | A.M. |
| .. | .. | NEW YORK Chambers St. (Fy.) A. | 9.09 | 9.03 | | | |
| 28.1 | 2.2 | JERSEY CITY A. N | 8.43 | 8.47 | | | |
| 25.9 | 2.7 | CROXTON N | 8.38 | 8.42 | | | |
| 23.2 | 0.2 | SUSQUEHANNA TRANSFER | s 8.33 | s 8.38 | s 8.55 | s 9.25 | s 9.55 |
| 23.0 | 2.0 | NORTH BERGEN | | | | | |
| 21.0 | 1.1 | GRANTON JCT. D | 8.30 | 8.35 | 8.52 | 9.22 | 9.52 |
| 19.9 | 0.9 | FAIRVIEW | | | | | |
| 19.0 | 0.7 | RIDGEFIELD | | | | | |
| 18.3 | 0.6 | MORSEMERE | | | | | |
| 17.7 | 1.0 | PALISADES PARK | | | | | |
| 16.7 | 2.5 | LEONIA | | | | | |
| 14.2 | 1.0 | ENGLEWOOD D | | | | | |
| 13.2 | 1.0 | HUDSON AVE. | | | | | |
| 12.2 | 1.2 | TENAFLY D | | | | | |
| 11.0 | 1.0 | CRESSKILL D | | | | | |
| 10.0 | 1.0 | DEMAREST | | Will operate Oct. 12 and Nov. 2 | Will operate Oct. 12 and Nov. 2 | | Will operate Oct. 12 and Nov. 2 |
| 9.0 | 1.8 | CLOSTER D | | | | | |
| 7.2 | 0.8 | NORWOOD | | | | | |
| 6.4 | 2.0 | NORTHVALE | | | | | |
| 4.4 | 1.2 | SPARKILL D | | | | | |
| 3.2 | 1.2 | PIERMONT | | | | | |
| 2.0 | 1.5 | GRAND VIEW | | | | | |
| 0.5 | 0.5 | SOUTH NYACK | | | | | |
| .. | .. | NYACK L. D | | | | | |
| | | | A.M. | A.M. | A.M. | A.M. | A.M. |

Single Track

All engines restricted Warren Dye Works siding, North Bergen.

### SPEED RESTRICTIONS

| | Miles per Hour |
|---|---|
| Passenger trains, Jersey City to Sparkill | 60 |
| Sparkill to Piermont | 30 |
| Piermont to Nyack | 40 |
| Freight trains, Croxton to Sparkill | 40 |
| Sparkill to Nyack | 20 |
| Sparkill to Piermont Dock | 15 |
| Interlocking switches, Croxton | 20 |
| Tracks 3 and 4, Lundys Lane-Granton Junction | 15 |
| Interlocking switches, Granton Jct. (Passenger Trains) | 30 |
| (Freight Trains) | 20 |
| Signal 8-1-N to Railroad Ave. Crossing Fairview Westbound | 40 |
| Class C-1, C-2, C-3, C-3A, N-1-2-3, K-2, K-2A, K-4, K-4B, K-5, K-5A engines over bridges 8.61 west of Fairview, 12.51 west of Leonia, and 14.83 west of Englewood | 20 |
| Street crossings, first east and first west of Englewood | 35 |
| End double track Tenafly westbound | 25 |
| Clinton Ave., Washington Ave. & Jay St., Tenafly | 20 |
| East end of double track Closter | 25 |
| West end of double track Closter, westbound | 25 |
| East end of double track Sparkilll | 25 |
| Kipp's crossing west of Sparkill | 10 |
| Washington Ave. crossing, South Nyack, eastbound | 10 |
| Trains hauling wrecking derrick, eight-wheel swivel truck cranes, steam shovels or other similar pivoted machinery | |
| Jersey City and Sparkill | 30 |
| Sparkill and Nyack | 20 |



## EASTWARD — FIRST CLASS — TRAINS (Read Up)

| N.Y.S.&W. 962 Saturday Only Except Holiday | N.Y.S.&W. 818 Daily | N.Y.S.&W. 920 Daily Except Sunday and Holiday | N.Y.S.&W. 820 Daily | N.Y.S.&W. 822 Daily | N.Y.S.&W. 824 Daily | N.Y.S.&W. 826 Daily | N.Y.S.&W. 828 Daily | N.Y.S.&W. 950 Saturday Only Ex. Hol. |
|---|---|---|---|---|---|---|---|---|
| A.M. | A.M. | A.M. | A.M. | P.M. | P.M. | P.M. | P.M. | P.M. |
| 9.27 | | 11.04 | | | | | | 4.34 |
| 9.13 | | 10.47 | | | | | | 4.22 |
| 9.08 | | 10.42 | | | | | | 4.17 |
| s 9.04 | s10.25 | | s11.25 | s12.25 | s 1.25 | s 2.25 | s 3.25 | |
| 9.01 | 10.22 | 10.34 | 11.22 | 12.22 | 1.22 | 2.22 | 3.22 | 4.09 |
| Will operate Feb. 12 | | Will operate Oct. 12, Nov. 2 and Feb. 12 | | | | | | Will operate Feb. 12 |
| A.M. | A.M. | A.M. | A.M. | P.M. | P.M. | P.M. | P.M. | P.M. |

### Hours of Crossing Protection

| | Week Days | Saturdays |
|---|---|---|
| Central Ave., Leonia | 6.00 A.M.–9.00 A.M.<br>2.15 P.M.–7.15 P.M. | 6.00 A.M.–9.00 A.M.<br>1.01 P.M.–6.00 P.M. |
| Forest Ave., Englewood | 6.00 A.M.–9.00 A.M.<br>2.15 P.M.–7.15 P.M. | 6.00 A.M.–9.00 A.M.<br>1.01 P.M.–6.00 P.M. |
| Englewood Ave., Englewood | 6.00 A.M.–9.00 A.M.<br>2.15 P.M.–7.15 P.M. | 6.00 A.M.–9.00 A.M.<br>1.01 P.M.–6.00 P.M. |
| Palisade Ave., Englewood | 6.30 A.M.–8.30 A.M.<br>1.15 P.M.–7.15 P.M. | 6.30 A.M.–8.30 A.M.<br>12.01 P.M.–6.00 P.M. |
| Demarest Ave., Englewood | 6.00 A.M.–9.00 A.M.<br>2.15 P.M.–7.15 P.M. | 6.00 A.M.–9.00 A.M.<br>1.01 P.M.–6.00 P.M. |
| Hamilton Ave., Englewood | 6.00 A.M.–9.00 A.M.<br>2.15 P.M.–7.15 P.M. | 6.00 A.M.–9.00 A.M.<br>1.01 P.M.–6.00 P.M. |
| Hudson Ave., Englewood | 6.00 A.M.–9.00 A.M.<br>2.15 P.M.–7.15 P.M. | 6.00 A.M.–9.00 A.M.<br>1.01 P.M.–6.00 P.M. |
| Ivy Lane, Englewood | 6.00 A.M.–9.00 A.M.<br>2.15 P.M.–7.15 P.M. | 6.00 A.M.–9.00 A.M.<br>1.01 P.M.–6.00 P.M. |
| Clinton Ave., Tenafly | 6.00 A.M.–8.45 A.M.<br>2.15 P.M.–7.30 P.M. | 6.00 A.M.–9.00 A.M.<br>1.01 P.M.–6.00 P.M. |
| Washington Ave., Tenafly | 6.00 A.M.–8.45 A.M.<br>2.15 P.M.–7.30 P.M. | 6.00 A.M.–9.00 A.M.<br>1.01 P.M.–6.00 P.M. |
| River Edge Road, Tenafly | 6.00 A.M.–8.45 A.M.<br>2.15 P.M.–7.30 P.M. | 6.00 A.M.–9.00 A.M.<br>1.01 P.M.–6.00 P.M. |
| Hardenberg Road, Demarest | 6.00 A.M.–8.45 A.M.<br>2.15 P.M.–7.30 P.M. | 6.00 A.M.–9.00 A.M.<br>1.01 P.M.–6.00 P.M. |
| Main St., Closter | 6.00 A.M.–8.30 A.M.<br>2.00 P.M.–7.30 P.M. | 6.00 A.M.–9.00 A.M.<br>1.01 P.M.–6.00 P.M. |
| Kipp's Crossing, Sparkill | 6.00 A.M.–8.15 A.M.<br>2.00 P.M.–7.45 P.M. | 6.00 A.M.–8.30 A.M.<br>12.45 P.M.–6.15 P.M. |
| Corneilson Ave., South Nyack | 5.45 A.M.–8.00 A.M.<br>2.15 P.M.–8.00 P.M. | 5.45 A.M.–8.00 A.M.<br>12.30 P.M.–6.15 P.M. |
| Clinton Ave., Nyack | 5.45 A.M.–8.00 A.M.<br>2.15 P.M.–8.00 P.M. | 5.45 A.M.–8.00 A.M.<br>12.30 P.M.–6.15 P.M. |
| Brookside Ave., Nyack | 5.45 A.M.–8.00 A.M.<br>2.15 P.M.–8.00 P.M. | 5.45 A.M.–8.00 A.M.<br>12.30 P.M.–6.15 P.M. |

| | Miles per hour |
|---|---|
| On Sundays, holidays and during period crossings not protected | 5 |

Palisade Ave., Englewood Ave. and Demarest Ave., Englewood, when not protected trains will stop and flag.

EASTWARD — FIRST CLASS — TRAINS (Read Up)

| Distance from Nyack | Distance between Stations | No. 36 STATIONS | N.Y.S.&W. 830 Saturday Sunday and Holiday Only | N.Y.S.&W. 924 Daily Except Saturday Sunday and Hol. | N.Y.S.&W. 832 Daily | N.Y.S.&W. 834 Daily Except Saturday Sunday & Holiday | N.Y.S.&W. 836 Daily |
|---|---|---|---|---|---|---|---|
| | | | P.M. | P.M. | P.M. | P.M. | P.M. |
| .. | .. | NEW YORK Chambers St. (Fy.) A. | | 5.02 | | | |
| 28.1 | 2.2 | JERSEY CITY A. N | | 4.44 | | | |
| 25.9 | 2.7 | CROXTON N | | 4.39 | | | |
| 23.2 | 0.2 | SUSQUEHANNA TRANSFER | s 4.25 | s 4.35 | s 5.25 | s 5.55 | s 6.25 |
| 23.0 | 2.0 | NORTH BERGEN | | | | | |
| 21.0 | 1.1 | GRANTON JCT. D | 4.22 | 4.32 | 5.22 | 5.52 | 6.22 |
| 19.9 | 0.9 | FAIRVIEW | | | | | |
| 19.0 | 0.7 | RIDGEFIELD | | | | | |
| 18.3 | 0.6 | MORSEMERE | | | | | |
| 17.7 | 1.0 | PALISADES PARK | | | | | |
| 16.7 | 2.5 | LEONIA | | | | | |
| 14.2 | 1.0 | ENGLEWOOD D | | | | | |
| 13.2 | 1.0 | HUDSON AVE. | | | | | |
| 12.2 | 1.2 | TENAFLY D | | | | | |
| 11.0 | 1.0 | CRESSKILL D | | | | | |
| 10.0 | 1.0 | DEMAREST | Will not operate Oct. 12 and Nov. 2 | Will operate Oct. 12 and Nov. 2 | | Will operate Oct. 12 and Nov. 2 | |
| 9.0 | 1.8 | CLOSTER D | | | | | |
| 7.2 | 0.8 | NORWOOD | | | | | |
| 6.4 | 2.0 | NORTHVALE | | | | | |
| 4.4 | 1.2 | SPARKILL D | | | | | |
| 3.2 | 1.2 | PIERMONT | | | | | |
| 2.0 | 1.5 | GRAND VIEW | | | | | |
| 0.5 | 0.5 | SOUTH NYACK | | | | | |
| .. | .. | NYACK L. D | | | | | |
| | | | P.M. | P.M. | P.M. | P.M. | P.M. |

Single Track



EASTWARD — FIRST CLASS — TRAINS (Read Up)

| N.Y.S.&W. 838 Daily Except Saturday Sunday & Holiday | N.Y.S.&W. 840 Daily | N.Y.S.&W. 842 Daily | N.Y.S.&W. 844 Daily Except Sunday and Hol. | N.Y.S.&W. 934 Sunday and Holiday Only | N.Y.S.&W. 846 Daily | N.Y.S.&W. 848 Daily | | |
|---|---|---|---|---|---|---|---|---|
| P.M. | P.M. | P.M. | P.M. | P.M. | P.M. | P.M. | | |
| | | | | 9.54 | | | | |
| | | | | 9.35 | | | | |
| | | | | 9.30 | | | | |
| s 6.55 | s 7.25 | s 8.25 | s 9.25 | s 9.25 | s10.25 | s11.40 | | |
| 6.52 | 7.22 | 8.22 | 9.22 | 9.22 | 10.22 | 11.37 | | |
| Will operate Oct. 12 and Nov. 2 | | | | Will not operate Oct. 12 and Nov. 2 | | | | |
| P.M. | P.M. | P.M. | P.M. | P.M. | P.M. | P.M. | | |

WESTWARD — FIRST CLASS — TRAINS (Read Down)

| Distance from Jersey City | Distance between Stations | No. 36 STATIONS | N.Y.S.&W. 959 Sunday Only | N.Y.S.&W. 851 Daily Except Sunday | N.Y.S.&W. 907 Daily Except Sunday and Holiday | N.Y.S.&W. 805 Daily Except Saturday Sunday & Holiday | N.Y.S.&W. 807 Daily Except Sunday |
|---|---|---|---|---|---|---|---|
| | | | P.M. | A.M. | A.M. | A.M. | A.M. |
| | | NEW YORK | | | | | |
| .. | .. | Chambers St. (Fy.) L. | 11.55 A.M. | | 6.15 | | |
| .. | .. | JERSEY CITY L. N | 12.35 | | 6.38 | | |
| 2.2 | 2.2 | CROXTON N | 12.40 | | 6.43 | | |
| 4.9 | 2.7 | SUSQUEHANNA TRANSFER | s12.45 | 12.45 | | 7.00 | 7.30 |
| 5.1 | 0.2 | NORTH BERGEN | | | | | |
| 7.1 | 2.0 | GRANTON JCT. D | 12.48 | 12.48 | 6.50 | 7.03 | 7.33 |
| 8.2 | 1.1 | FAIRVIEW | | | | | |
| 9.1 | 0.9 | RIDGEFIELD | | | | | |
| 9.8 | 0.7 | MORSEMERE | | | | | |
| 10.4 | 0.6 | PALISADES PARK | | | | | |
| 11.4 | 1.0 | LEONIA | | | | | |
| 13.9 | 2.5 | ENGLEWOOD D | | | | | |
| 14.9 | 1.0 | HUDSON AVE | | | | | |
| 15.9 | 1.0 | TENAFLY D | | | | | |
| 17.1 | 1.2 | CRESSKILL D | | | | | |
| 18.1 | 1.0 | DEMAREST | | | | | |
| 19.1 | 1.0 | CLOSTER D | | | | | |
| 20.9 | 1.8 | NORWOOD | | | | | |
| 21.7 | 0.8 | NORTHVALE | | | | | |
| 23.7 | 2.0 | SPARKILL D | | | Will operate Oct. 12 and Nov. 2. | Will operate Oct. 12 and Nov. 2. | |
| 24.9 | 1.2 | PIERMONT | | | | | |
| 26.1 | 1.2 | GRAND VIEW | | | | | |
| 27.6 | 1.5 | SOUTH NYACK | | | | | |
| 28.1 | 0.5 | NYACK A. D | | | | | |
| | | | A.M. | A.M. | A.M. | A.M. | A.M. |

Single Track



WESTWARD — FIRST CLASS — TRAINS (Read Down)

| N.Y.S.&W. 809 Daily Except Saturday Sunday & Holiday | N.Y.S.&W. 811 Daily | N.Y.S.&W. 813 Daily Except Saturday Sunday & Holiday | N.Y.S.&W. 815 Daily | N.Y.S.&W. 909 Sunday Only | N.Y.S.&W. 819 Daily | N.Y.S.&W. 821 Daily | | |
|---|---|---|---|---|---|---|---|---|
| A.M. | A.M. | A.M. | A.M. | A.M. | A.M. | A.M. | | |
| | | | | 9.10 | | | | |
| | | | | 9.30 | | | | |
| | | | | 9.35 | | | | |
| 8.00 | 8.30 | 9.00 | 9.30 | | 10.30 | 11.30 | | |
| 8.03 | 8.33 | 9.03 | 9.33 | 9.43 | 10.33 | 11.33 | | |
| Will operate Oct. 12 and Nov. 2. | | Will operate Oct. 12 and Nov. 2. | | | | | | |
| A.M. | A.M. | A.M. | A.M. | A.M. | A.M. | A.M. | | |

## WESTWARD — FIRST CLASS — TRAINS (Read Down)

| Distance from Jersey City | Distance between Stations | No. 36 STATIONS | N.Y.S.&W 915 | N.Y.S.&W. 823 | | N.Y.S.&W. 951 | |
|---|---|---|---|---|---|---|---|
| | | | Daily Except Saturday Sunday& Holiday | Daily | | Saturday Only Except Holiday | |
| | | | A.M. | P.M. | | P.M. | |
| .. | .. | NEW YORK Chambers St. (Fy.) ....L. | 11.40 | | | 12.30 | |
| .. | .. | JERSEY CITY .....L. N | 11.55 | | | 12.50 | |
| 2.2 | 2.2 | CROXTON.....N | 12.00 | | | 12.55 | |
| 4.9 | 2.7 | SUSQUEHANNA TRANSFER | | 12.30 | | s 1.00 | |
| 5.1 | 0.2 | NORTH BERGEN..... | f12.04 | | | | |
| 7.1 | 2.0 | GRANTON JCT.....D | 12.07 | 12.33 | | 1.04 | |
| 8.2 | 1.1 | FAIRVIEW..... | | | | | |
| 9.1 | 0.9 | RIDGEFIELD..... | | | | | |
| 9.8 | 0.7 | MORSEMERE..... | | | | | |
| 10.4 | 0.6 | PALISADES PARK..... | | | | | |
| 11.4 | 1.0 | LEONIA..... | | | | | |
| 13.9 | 2.5 | ENGLEWOOD.....D | | | | | |
| 14.9 | 1.0 | HUDSON AVE..... | | | | | |
| 15.9 | 1.0 | TENAFLY.....D | | | | | |
| 17.1 | 1.2 | Single Track CRESSKILL.....D | | | | | |
| 18.1 | 1.0 | DEMAREST..... | Will operate Oct. 12 and Nov. 2 | | | | |
| 19.1 | 1.0 | CLOSTER.....D | | | | | |
| 20.9 | 1.8 | NORWOOD..... | | | | | |
| 21.7 | 0.8 | NORTHVALE..... | | | | | |
| 23.7 | 2.0 | SPARKILL.....D | | | | Will operate Feb. 12 | |
| 24.9 | 1.2 | PIERMONT..... | | | | | |
| 26.1 | 1.2 | GRAND VIEW..... | | | | | |
| 27.6 | 1.5 | SOUTH NYACK..... | | | | | |
| 28.1 | 0.5 | NYACK.....A. D | | | | | |
| | | | P.M. | P.M. | | P.M. | |



## WESTWARD — FIRST CLASS — TRAINS (Read Down)

| N.Y.S.&W. 825 | 1183 | N.Y.S.&W. 953 | N.Y.S.&W. 827 | | N.Y.S.&W. 829 | N.Y.S.&W. 831 | N.Y.S.&W. 919 | |
|---|---|---|---|---|---|---|---|---|
| Daily | Saturday Only Except Holiday | Saturday Only Except Holiday | Daily | | Daily | Daily | Daily Except Sunday and Holiday | |
| P.M. | P.M. | P.M. | P.M. | | P.M. | P.M. | P.M. | |
| | N.B. 1.10 | 1.20 | | | | | 4.40 | |
| | 1.27 | 1.35 | | | | | 5.00 | |
| | 1.32 | 1.40 | | | | | 5.05 | |
| 1.30 | s 1.37 | s 1.45 | 2.30 | | 3.30 | 4.30 | s 5.10 | |
| 1.33 | 1.40 | 1.49 | 2.33 | | 3.33 | 4.33 | 5.13 | |
| | s 1.43 | | | | | | | |
| | s 1.45 | | | | | | | |
| | s 1.47 | | | | | | | |
| | s 1.49 | | | | | | | |
| | s 1.54 | | | | | | | |
| | s 1.56 | | | | | | | |
| | s 1.59 | | | | | | | |
| | s 2.02 | | | | | | | |
| No. 1183 will operate Feb. 12 | s 2.04 | | | | | | Will operate Oct. 12, Nov. 2 and Feb. 12 | |
| | s 2.07 | | | | | | | |
| | s 2.10 | | | | | | | |
| | s 2.12 | | | | | | | |
| | s 2.16 | Will operate Feb. 12 | | | | | | |
| | s 2.20 | | | | | | | |
| | f 2.24 | | | | | | | |
| | s 2.28 | | | | | | | |
| | 2.30 | | | | | | | |
| P.M. | P.M. | P.M. | P.M. | | P.M. | P.M. | P.M. | |

## WESTWARD — FIRST CLASS — TRAINS (Read Down)

| Distance from Jersey City | Distance between Stations | No. 36 STATIONS | 1101 Daily Except Sunday and Holiday P.M. | N.Y.S.&W. 833 Daily P.M. | N.Y.S.&W. 923 Daily Except Saturday Sunday & Holiday P.M. | N.Y.S.&W. 927 Daily Except Saturday Sunday & Holiday P.M. | 1103 Daily Except Saturday and Sunday P.M. |
|---|---|---|---|---|---|---|---|
| | | NEW YORK | N.B. | | N.B. | N.B. | N.B. |
| .. | .. | Chambers St. (Fy.) ..... L | 5.00 | ..... | 5.15 | 5.20 | 5.28 |
| .. | .. | JERSEY CITY ..... L. N | 5.15 | ..... | 5.30 | 5.35 | 5.40 |
| 2.2 | 2.2 | CROXTON ..... N | 5.20 | ..... | 5.35 | 5.40 | 5.45 |
| 4.9 | 2.7 | SUSQUEHANNA TRANSFER | ..... | 5.30 | s 5.40 | s 5.45 | s 5.49 |
| 5.1 | 0.2 | NORTH BERGEN | ..... | ..... | ..... | ..... | ..... |
| 7.1 | 2.0 | GRANTON JCT. ..... D | 5.27 | 5.33 | 5.43 | 5.48 | 5.53 |
| 8.2 | 1.1 | FAIRVIEW | ..... | ..... | ..... | ..... | ..... |
| 9.1 | 0.9 | RIDGEFIELD | s 5.30 | ..... | ..... | ..... | s 5.56 |
| 9.8 | 0.7 | MORSEMERE | *..... | ..... | ..... | ..... | ..... |
| 10.4 | 0.6 | PALISADES PARK | s 5.33 | ..... | ..... | ..... | s 6.00 |
| 11.4 | 1.0 | LEONIA | s 5.35 | ..... | ..... | ..... | s 6.03 |
| 13.9 | 2.5 | ENGLEWOOD ..... D | s 5.39 | No. 1101 Saturday stops Morsemere, discharge passengers; arrive Nyack 6.21 P.M. | ..... | No. 927 Will operate Oct. 12 and Nov. 2 | s 6.08 |
| 14.9 | 1.0 | HUDSON AVE. | s 5.42 | | ..... | | s 6.11 |
| 15.9 | 1.0 | TENAFLY ..... D | s 5.44 | | ..... | | s 6.14 |
| 17.1 | 1.2 | CRESSKILL ..... D | s 5.47 | | ..... | | s 6.17 |
| 18.1 | 1.0 | DEMAREST | s 5.50 | | Will operate Oct. 12 and Nov. 2 | | s 6.20 |
| 19.1 | 1.0 | CLOSTER ..... D | s 5.53 | | | | s 6.23 |
| 20.9 | 1.8 | NORWOOD | s 5.56 | | | | s 6.26 |
| 21.7 | 0.8 | NORTHVALE | s 5.58 | | | | s 6.29 |
| 23.7 | 2.0 | SPARKILL ..... D | s 6.03 | | | No. 1103 Will operate Dec. 25, Jan. 1 and Feb. 12. | s 6.34 |
| 24.9 | 1.2 | PIERMONT | s 6.07 | | | | s 6.38 |
| 26.1 | 1.2 | GRAND VIEW | s 6.11 | | | | s 6.42 |
| 27.6 | 1.5 | SOUTH NYACK | s 6.15 | | | | s 6.46 |
| 28.1 | 0.5 | NYACK ..... A. D | 6.17 | | | | 6.48 |
| | | | P.M. | P.M. | P.M. | P.M. | P.M. |

Single Track



## WESTWARD — FIRST CLASS — TRAINS (Read Down)

| N.Y.S.&W. 957 Saturday Only Except Holiday P.M. | | N.Y.S.&W. 835 Daily Except Saturday Sunday & Holiday P.M. | N.Y.S.&W. 929 Daily Except Saturday Sunday and Hol. P.M. | N.Y.S.&W. 837 Daily P.M. | 1105 Daily Except Saturday Sunday & Holiday P.M. | | N.Y.S.&W. 931 Daily Except Sunday P.M. | N.Y.S.&W. 841 Daily P.M. |
|---|---|---|---|---|---|---|---|---|
| | | | | | N.B. | | N.B. | |
| 5.38 | ..... | ..... | 5.48 | ..... | 6.20 | ..... | 6.30 | ..... |
| 5.50 | ..... | ..... | 6.05 | ..... | 6.35 | ..... | 6.50 | ..... |
| 5.55 | ..... | ..... | 6.10 | ..... | 6.40 | ..... | 6.55 | ..... |
| s 6.00 | ..... | 6.00 | s 6.15 | 6.30 | ..... | | s 7.00 | 7.30 |
| ..... | ..... | ..... | ..... | ..... | ..... | | ..... | ..... |
| 6.03 | ..... | 6.03 | 6.18 | 6.33 | 6.48 | | 7.03 | 7.33 |
| ..... | ..... | ..... | ..... | ..... | ..... | | ..... | ..... |
| ..... | ..... | ..... | ..... | ..... | s 6.51 | ..... | ..... | ..... |
| ..... | ..... | ..... | ..... | ..... | ..... | ..... | ..... | ..... |
| ..... | ..... | ..... | ..... | ..... | ..... | ..... | ..... | ..... |
| ..... | ..... | ..... | ..... | ..... | s 6.56 | ..... | ..... | ..... |
| ..... | ..... | ..... | ..... | ..... | s 7.01 | ..... | ..... | ..... |
| ..... | ..... | ..... | ..... | ..... | s 7.04 | ..... | ..... | ..... |
| ..... | ..... | ..... | ..... | ..... | s 7.07 | ..... | ..... | ..... |
| ..... | ..... | ..... | ..... | ..... | s 7.10 | ..... | ..... | ..... |
| ..... | ..... | Will operate Oct. 12 and Nov. 2 | Will operate Oct. 12 and Nov. 2 | No. 1105 will operate Oct. 12, Nov. 2. | s 7.13 | ..... | ..... | ..... |
| ..... | ..... | | | | s 7.16 | ..... | ..... | ..... |
| ..... | ..... | | | | s 7.19 | ..... | ..... | ..... |
| ..... | ..... | | | | s 7.22 | ..... | ..... | ..... |
| Will operate Feb. 12 | ..... | | | | s 7.27 | ..... | ..... | ..... |
| | ..... | | | | s 7.31 | ..... | ..... | ..... |
| | ..... | | | | | ..... | ..... | ..... |
| | ..... | | | | s 7.37 | ..... | ..... | ..... |
| | ..... | | | | 7.39 | ..... | ..... | ..... |
| P.M. | | P.M. | P.M. | P.M. | P.M. | | P.M. | P.M. |

## WESTWARD — FIRST CLASS — TRAINS (Read Down)

| Distance from Jersey City | Distance between Stations | No. 36 STATIONS | N.Y.S.&W. 843 Daily P.M. | N.Y.S.&W. 845 Daily P.M. | N.Y.S.&W. 933 Daily Ex. Sat. Sun. and Hol. P.M. | N.Y.S.&W. 847 Saturday Sunday and Hol. P.M. | N.Y.S.&W. 937 Sunday Only P.M. |
|---|---|---|---|---|---|---|---|
| | | NEW YORK | | | N.B. | | N.B. |
| .. | .. | Chambers St. (Fy.)....L. | | | 10.00 | | 10.15 |
| .. | .. | JERSEY CITY.....L. N | | | 10.20 | | 10.30 |
| 2.2 | 2.2 | CROXTON.....N | | | 10.25 | | 10.35 |
| 4.9 | 2.7 | SUSQUEHANNA TRANSFER | 8.30 | 9.30 | s10.30 | 10.30 | s10.40 |
| 5.1 | 0.2 | NORTH BERGEN | | | | | |
| 7.1 | 2.0 | GRANTON JCT.....D | 8.33 | 9.33 | 10.33 | 10.33 | 10.43 |
| 8.2 | 1.1 | FAIRVIEW | | | | | |
| 9.1 | 0.9 | RIDGEFIELD | | | | | |
| 9.8 | 0.7 | MORSEMERE | | | | | |
| 10.4 | 0.6 | PALISADES PARK | | | | | |
| 11.4 | 1.0 | LEONIA | | | | | |
| 13.9 | 2.5 | ENGLEWOOD.....D | | | | | |
| 14.9 | 1.0 | HUDSON AVE | | | | | |
| 15.9 | 1.0 | TENAFLY.....D | | | | | |
| 17.1 | 1.2 | CRESSKILL.....D | | | | | |
| 18.1 | 1.0 | DEMAREST | | | | | |
| 19.1 | 1.0 | CLOSTER.....D | | | | | |
| 20.9 | 1.8 | NORWOOD | | | | | |
| 21.7 | 0.8 | NORTHVALE | | | | | |
| 23.7 | 2.0 | SPARKILL.....D | | | Will operate Oct. 12 and Nov. 2. | Will not operate Oct. 12 and Nov. 2. | |
| 24.9 | 1.2 | PIERMONT | | | | | |
| 26.1 | 1.2 | GRAND VIEW | | | | | |
| 27.6 | 1.5 | SOUTH NYACK | | | | | |
| 28.1 | 0.5 | NYACK.....A. D | | | | | |
| | | | P.M. | P.M. | P.M. | P.M. | P.M. |

Single Track

## WESTWARD — FIRST CLASS — TRAINS' (Read Down)

| Distance from Jersey City | Distance between Stations | No. 36 STATIONS | N.Y.S.&W. 849 Daily P.M. |
|---|---|---|---|
| | | NEW YORK | |
| .. | .. | Chambers St. (Fy.)....L. | |
| .. | .. | JERSEY CITY.....L. N | |
| 2.2 | 2.2 | CROXTON.....N | |
| 4.9 | 2.7 | SUSQUEHANNA TRANSFER | 11.45 |
| 5.1 | 0.2 | NORTH BERGEN | |
| 7.1 | 2.0 | GRANTON JCT.....D | 11.48 |
| 8.2 | 1.1 | FAIRVIEW | |
| 9.1 | 0.9 | RIDGEFIELD | |
| 9.8 | 0.7 | MORSEMERE | |
| 10.4 | 0.6 | PALISADES PARK | |
| 11.4 | 1.0 | LEONIA | |
| 13.9 | 2.5 | ENGLEWOOD.....D | |
| 14.9 | 1.0 | HUDSON AVE | |
| 15.9 | 1.0 | TENAFLY.....D | |
| 17.1 | 1.2 | CRESSKILL.....D | |
| 18.1 | 1.0 | DEMAREST | |
| 19.1 | 1.0 | CLOSTER.....D | |
| 20.9 | 1.8 | NORWOOD | |
| 21.7 | 0.8 | NORTHVALE | |
| 23.7 | 2.0 | SPARKILL.....D | |
| 24.9 | 1.2 | PIERMONT | |
| 26.1 | 1.2 | GRAND VIEW | |
| 27.6 | 1.5 | SOUTH NYACK | |
| 28.1 | 0.5 | NYACK.....A. D | |
| | | | P.M. |

Single Track



## STATION LIST

For the use of Agent Conductors and others for reporting movements of Trains, Locomotives, and Cars

### NEW YORK DIVISION

| Miles from Jersey City, N. J. | | Station No. |
|---|---|---|
| – | Jersey City, N. J. | 0 |
| 2 | Croxton | 2 |
| 8 | N. J. & N. Y. Junction | 8 |
| 9 | Rutherford | 9 |
| 9 | Rutherford Junction | 9800 |
| 10 | Carlton Hill | 10 |
| 10 | Passaic Park | 9801 |
| 10 | Prospect Street (Passaic) | 9802 |
| 11 | Passaic | 11 |
| 12 | Harrison Street (Passaic) | 12 |
| 12 | Clifton | 9803 |
| 13 | N. J. Flour Co.'s Switch | 13 |
| 14 | Lake View | 14 |
| 16 | Paterson | 16 |
| 17 | River Street (Paterson) | 17 |
| 18 | Hawthorne | 18 |
| 19 | Glen Rock | 19 |
| 20 | Ridgewood Junction | 20 |
| 21 | Ridgewood | 21 |
| 22 | Hohokus | 22 |
| 22 | Nagles Switch | 9804 |
| 23 | Waldwick | 23 |
| 25 | Allendale | 25 |
| 27 | Ramsey | 27 |
| 28 | Ramsey Lbr. Switch | 28 |
| 28 | Ward Switch | 9805 |
| 29 | Mahwah | 29 |
| 30 | West Mahwah | 30 |
| 31 | Suffern, N. Y. | 31 |
| 32 | Hillburn | 32 |
| 33 | Ramapo | 33 |
| 33 | Ramapo Storage | 9806 |
| 34 | Sterlington | 34 |
| 35 | Sloatsburg | 35 |
| 37 | Tuxedo | 37 |
| 41 | Southfields | 41 |
| 43 | Arden | 43 |
| 45 | Newburgh Junction | 45 |
| 46 | Harriman | 46 |
| 49 | Monroe | 49 |
| 50 | Rockland Electric Light Switch | 50 |
| 51 | Oxford | 51 |
| 53 | Greycourt | 53 |
| 54 | Chester | 54 |
| 59 | Goshen | 59 |
| 63 | New Hampton | 63 |
| 65 | Main Street (Middletown) | 65 |
| 66 | Middletown | 69 |
| 67 | Middletown Summit | 67 |
| 69 | Howells Junction—Fish's Switch | 69 |
| 70 | Howells | 70 |
| 75 | Otisville | 75 |
| 80 | Graham Junction | 80 |
| 87 | Port Jervis | 87 |

### NEWARK BRANCH

| Miles from Jersey City, N. J. | | Station No. |
|---|---|---|
| – | Jersey City, N. J. | 0 |
| 2 | Croxton | 2 |
| 4 | New York, Greenwood Lake Junction | 1004 |
| 5 | Seaboard | 1005 |
| 7 | Harrison | 1007 |
| 7 | Grant Avenue | 9808 |
| 8 | Newark | 1008 |
| 9 | Riverside | 1009 |
| 9 | Woodside | 9809 |
| 10 | Belleville (Cleveland St.) | 1010 |
| 11 | Belleville | 1011 |
| 12 | Nutley (Walnut St.) | 1012 |
| 13 | Nutley | 1013 |
| 13 | Nutley (Franklin Ave.) | 9810 |
| 14 | Allwood | 1014 |
| 16 | Athenia | 1016 |
| 18 | South Paterson | 1018 |
| 19 | Paterson.....(1019) | 16 |

### WEEHAWKEN BRANCH

| Miles from Jersey City, N. J. | | Station No. |
|---|---|---|
| – | Jersey City, N. J. | 0 |
| 3 | Weehawken | 3004 |

### BERGEN COUNTY RAILROAD

| Miles from Rutherford Junction | | Station No. |
|---|---|---|
| – | Rutherford Junction, N. J. | 9800 |
| 2 | Garfield | 5011 |
| 3 | Dundee Junction | 5012 |
| 4 | Plauderville | 5013 |
| 5 | Passaic Junction | 5014 |
| 6 | Coalberg Junction | 5015 |
| 7 | Warren Point | 5016 |
| 8 | Fair Lawn—Radburn | 5017 |
| 9 | Glen Rock | 5018 |
| 10 | Ridgewood Junction.....(5019) | 20 |

### DUNDEE SPUR

| Miles from Dundee Junction | | Station No. |
|---|---|---|
| – | Dundee Junction | 5012 |
| 1 | Dundee | 9014 |

### PIERMONT BRANCH

| Miles from Piermont Dock | | Station No. |
|---|---|---|
| – | Piermont Dock, N. Y. | 6025 |
| 1 | Sparkill | 2024 |
| 1 | Convent Switch | 5024 |
| 2 | Orangeburg | 5025 |
| 3 | Blauvelt | 5026 |
| 3 | Rockland State Hospital | 9812 |
| 7 | Nanuet Crossing | 5030 |
| 8 | Nanuet Junction | 5031 |
| 9 | Smith's Switch | 5032 |
| 10 | Spring Valley | 5033 |
| 11 | Monsey | 5034 |
| 14 | Tallmans | 5037 |
| 16 | New Switch (Suffern) | 5039 |
| 17 | Suffern (5040) | 31 |

### PINE ISLAND BRANCH

| Miles from Goshen, N. Y. | | Station No. |
|---|---|---|
| – | Goshen | 59 |
| 1 | Stewart's | 4060 |
| 2 | Houston's | 4061 |
| 4 | Orange Farm | 4063 |
| 6 | Florida | 4065 |
| 7 | Round Hill | 4066 |
| 8 | Big Island | 4067 |
| 9 | Mt. Eve | 4068 |
| 11 | Pine Island Junction | 4070 |
| 12 | Pine Island | 4071 |

### WEST CORNWALL SPUR

| Miles from West Cornwall | | Station No. |
|---|---|---|
| – | West Cornwall | 1056 |
| 2 | Vails Gate Junction (1058) | 6067 |

### NEWBURGH BRANCH

| Miles from Greycourt | | Station No. |
|---|---|---|
| – | Greycourt, N. Y. | 53 |
| 3 | Craigville | 6056 |
| 5 | Blooming Grove | 6058 |
| 7 | Washingtonville | 6060 |
| 10 | Salisbury Mills | 6063 |
| 13 | Vails Gate | 6066 |
| 14 | Vails Gate Junction | 6067 |
| 16 | New Windsor | 6069 |
| 17 | West Newburgh | 6070 |
| 19 | Newburgh | 6072 |

### MONTGOMERY BRANCH

| Miles from Goshen | | Station No. |
|---|---|---|
| – | Goshen | 59 |
| 2 | Kipp's | 1061 |
| 5 | Campbell Hall | 1064 |
| 5 | Campbell Hall Junction | 9813 |
| 7 | Neely Town | 1066 |
| 9 | Beaver Dam | 1068 |
| 10 | Montgomery | 0691 |

### MIDDLETOWN & CRAWFORD BRANCH

| Miles from Main St. Middletown | | Station No. |
|---|---|---|
| – | Main Street (Middletown) | 65 |
| 4 | Crawford Junction | 5069 |
| 6 | Circleville | 5071 |
| 8 | Bullville | 5073 |
| 11 | Thompson Ridge | 5076 |
| 12 | Van Keuren's | 5077 |
| 14 | Pine Bush | 5079 |

### N. Y. N. H. &. H. TRACKAGE

| Miles from Campbell Hall | | Station No. |
|---|---|---|
| – | Campbell Hall Junction | 9813 |
| 4 | Maybrook | 3067 |

### GRAHAM LINE

| Miles from Newburgh Junction | | Station No. |
|---|---|---|
| – | Newburgh Junction | 45 |
| 1 | Harriman's Switch | 2046 |
| 3 | Central Valley | 2048 |
| 4 | Highland Mills | 2049 |
| 9 | BS Tower | 2054 |
| 11 | Moodna Creek | 2056 |
| 15 | Clarks Siding | 2060 |
| 20 | Campbell Hall | 2065 |
| 21 | MQ Tower | 2066 |
| 26 | Red Onion Switch | 2071 |
| 31 | Howells Junction | 2076 |
| 37 | Otisville | 2082 |
| 42 | Graham Junction (2087) | 80 |

### NORTHERN RAILROAD OF NEW JERSEY

| Miles from Jersey City | | Station No. |
|---|---|---|
| – | Jersey City, N. J. | 0 |
| 2 | Croxton | 2 |
| 3 | Lundy's Lane | 2003 |
| 5 | North Bergen | 2005 |
| 6 | New Durham | 2006 |
| 7 | Granton Junction | 2007 |
| 8 | Fairview | 2008 |
| 9 | Ridgefield | 2009 |
| 10 | Morsemere | 2010 |
| 11 | Palisades Park | 2011 |
| 12 | Leonia | 2012 |
| 13 | Englewood (Sheffield Ave.) | 2013 |
| 14 | Englewood | 2014 |
| 15 | Englewood (Hudson Ave.) | 2015 |

### NORTHERN RAILROAD OF NEW JERSEY—*Continued*

| Miles from Jersey City, N. J. | | Station No. |
|---|---|---|
| 16 | Tenafly | 2016 |
| 17 | Cresskill | 2017 |
| 18 | Demarest | 2018 |
| 19 | Closter | 2019 |
| 21 | Norwood | 2021 |
| 22 | Northvale | 2022 |
| 23 | Tappan, N. Y. | 2023 |
| 24 | Sparkill | 2024 |
| 25 | Piermont | 2025 |
| 26 | Grand View | 2026 |
| 27 | South Nyack | 2027 |
| 28 | Nyack | 2028 |

### NEW YORK & GREENWOOD LAKE RAILWAY

| Miles from Jersey City, N.J. | | Station No. |
|---|---|---|
| – | Jersey City, N. J. | 0 |
| 2 | Croxton | 2 |
| 4 | New York, Greenwood Lake Junction | 1004 |
| 7 | Arlington | 3007 |
| 7 | West Arlington | 9814 |
| 8 | North Newark | 3008 |
| 9 | Forest Hill | 3009 |
| 9 | Soho | 9815 |
| 9 | Belwood Park | 9816 |
| 9 | Orchard Street | 9817 |
| 10 | Bloomfield (Walnut St.) | 3010 |
| 11 | Glen Ridge | 3011 |
| 12 | Montclair | 3012 |
| 13 | Watchung Avenue (Montclair) | 3013 |
| 14 | Upper Montclair | 3014 |
| 14 | Mountain Avenue | 9818 |
| 15 | Montclair Heights | 3015 |
| 16 | Consolidated Stone Co. | 3016 |
| 17 | Great Notch | 3017 |
| 18 | Little Falls | 3018 |
| 19 | Singac | 3019 |
| 22 | Mountain View | 3022 |
| 23 | Wayne | 3023 |
| 24 | Pequannock | 3024 |
| 25 | Pompton Plains | 3025 |
| 27 | Riverdale | 3027 |
| 27 | Pompton | 9819 |
| 28 | Pompton Junction | 3028 |
| 30 | Haskells | 3030 |
| 31 | Wanaque-Midvale | 3031 |

### ORANGE BRANCH

| Miles from Forest Hill | | Station No. |
|---|---|---|
| – | Forest Hill | 3009 |
| 1 | Silver Lake | 6010 |
| 1 | Bloomfield | 9820 |
| 2 | Watsessing Junction | 6011 |
| 2 | Pierson's Siding, East Orange | 9821 |
| 2 | Brighton Avenue | 9822 |
| 3 | Orange | 6012 |
| 3 | Edison Switch | 9823 |
| 3 | Llewellyn | 9824 |
| 4 | Og Siding, West Orange | 6013 |

### CALDWELL BRANCH

| Miles from Great Notch | | Station No. |
|---|---|---|
| – | Great Notch | 3017 |
| 1 | Cedar Grove | 6018 |
| 2 | Overbrook | 6019 |
| 3 | Asylum Switch | 6020 |
| 3 | Verona | 9825 |
| 4 | Caldwell | 6021 |
| 5 | Essex Fells | 6022 |

### NEW JERSEY & NEW YORK RAILROAD

| Miles from Jersey City, N. J. | | Station No. |
|---|---|---|
| – | Jersey City, N. J. | 0 |
| 2 | Croxton | 2 |
| 8 | N. J. & N. Y. Junction | 8 |
| 9 | Carlstadt | 4009 |
| 10 | Wood Ridge | 4010 |
| 11 | Hasbrouck Heights | 4011 |
| 12 | Hasbrouck Heights (Williams Ave.) | 4012 |
| 12 | Hackensack (Essex Street) | 9827 |
| 13 | Hackensack (Central Avenue) | 4013 |
| 14 | Hackensack (Anderson Street) | 4014 |
| 14 | Hackensack (Fairmount Avenue) | 9828 |
| 15 | North Hackensack | 4015 |
| 16 | River Edge | 4016 |
| 17 | New Milford | 4017 |
| 18 | Oradell | 4018 |
| 19 | Emerson | 4019 |
| 20 | Westwood | 4020 |
| 21 | Hillsdale | 4021 |
| 22 | Hillsdale Manor | 4022 |
| 23 | Woodcliff Lake | 4023 |
| 24 | Park Ridge | 4024 |
| 25 | Montvale | 4025 |
| 26 | Pearl River, N. Y. | 4026 |
| 28 | Nanuet | 4028 |
| 28 | Nanuet Junction (4028) | 5031 |
| 29 | Smith's Switch (4029) | 5032 |
| 30 | Spring Valley (4030) | 5033 |
| 33 | New Hempstead | 4033 |
| 34 | Summitt Park | 4034 |
| 35 | Pomona | 4035 |
| 36 | Mount Ivy | 4036 |
| 37 | Letchworth Village | 4037 |
| 38 | Thiells | 4038 |
| 39 | Stony Point Switch | 4039 |

J. J. LITTLE & IVES CO., PRINTERS, NEW YORK

## Assistant Superintendents

G. F. RAYMUS
C. S. KINBACK

## Train Masters

H. A. RHOADS
T. J. SANOK
D. M. RANEY
D. A. LOGAN
J. W. CONWAY

## Chief Train Dispatcher

C. L. SMITH

## Assistant Chief Train Dispatchers

F. W. DANA
E. J. WHELAN
C. FULTON